INSTALLING, OPERATING & MAINTAINING

299.2/.3–599.2/.3 High Efficiency Water Heaters and Heating Boilers

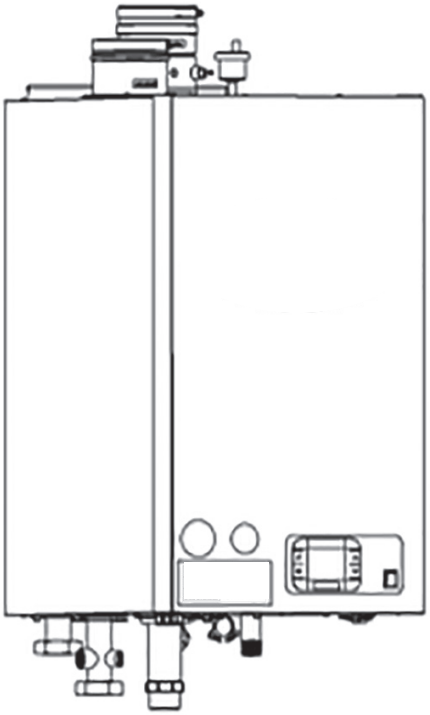

299.2/.3–599.2/.3

300,000 BTU/hr
399,000 BTU/hr
630,000 BTU/hr

Do not store or use gasoline or other flammable vapors and liquids in the vicinity of this or any other appliance.

WHAT TO DO IF YOU SMELL GAS:

- Do not try to light any appliance
- Do not touch any electrical switch
- Do not use any phone in your building

Immediately call your gas supplier from a neighbor's phone. Follow the gas supplier instructions. If you cannot reach your gas supplier, call the fire department.

UL 795-2011/CSA3.4
ANSI Z21.13-2014/CSA 4.9-2014
UL 795-2011/CSA 3.4
SCAQMD 1146.2

New York	Massachusetts	SCAQMD	CEC Listed
MEA 425-05-E	C1-0319-441	Compliant Rule1146.2	California Energy Commission

⚠ WARNING

If the information in this manual is not followed exactly, a fire or explosion may result causing property damage, personal injury or death.

⚠ WARNING

These appliances MUST be installed by a properly licensed individual in the City and State which the unit is being installed. All start up adjustments and subsequent service work must be done by a similarly licensed contractor or a factory trained service individual. Failure to comply could result in loss of warranty and or severe personal injury, death and or substantial property damage. **These instructions are required to be kept with the appliance on the left side, in the pocket provided.**

USING THIS MANUAL

Throughout this manual you will see these special attention boxes similar to those below, which are intended to supplement the instructions and make special notice of potential hazards. These categories are in the judgment of the Manufacturer.

⚠ DANGER

Indicates a condition or hazard which MAY cause severe personal injury, death, or major property damage.

⚠ CAUTION

Indicates a condition or hazard which MAY cause severe personal injury, death, or major property damage.

⚠ WARNING

Indicates a condition or hazard which MAY cause severe personal injury, death, or major property damage.

⚠ WARNING

- THE VENT SYSTEM IS RATED AND DESIGNED TO BE 2 PIPE SEALED COMBUSTION ONLY, POLYPROPYLENE (PP), PVC SCH 40 OR CPVC SCH 40 OR 80 OR AL 29-4C STAINLESS VENTING FOR ALL MODELS. A FACTORY ENGINEERED VENTING SYSTEM MAY ALLOW FOR EXCEPTIONS; CONSULT FACTORY FOR DETAILS.
- THIS APPLIANCE INSTALLATION MUST CONFORM TO THE LATEST EDITION OF THE “NATIONAL FUEL GAS CODE” ANSI Z223.1 NFPA 54 AND/OR CAN/CGAB149 INSTALLATION CODES. STATE AND LOCAL CODES MIGHT ALSO APPLY TO INSTALLATION.
- WHERE REQUIRED BY THE AUTHORITY HAVING JURISDICTION, THE INSTALLATION MUST CONFORM TO THE STANDARDS FOR CONTROLS AND SAFETY DEVICES FOR AUTOMATICALLY FIRED APPLIANCES, ANSI/ASME APPLIANCE AND PRESSURE VESSEL CODE, SECTION IV, ALONG WITH CSD-1.
- THE APPLIANCE, GAS PIPING, WATER PIPING, VENTING AND ELECTRICAL MUST BE INSTALLED BY TRAINED & QUALIFIED PERSONNEL FAMILIAR WITH INSTALLATION PRACTICES, LOCAL CODE, AND LICENSING REQUIREMENTS.
- IF THE INFORMATION IN THESE INSTRUCTIONS ARE NOT FOLLOWED EXACTLY, A FIRE OR EXPLOSION MAY RESULT, CAUSING PROPERTY DAMAGE, PERSONAL INJURY, OR DEATH.
- DO NOT STORE OR USE GASOLINE OR OTHER FLAMMABLE VAPORS AND LIQUIDS IN THE VICINITY OF THIS OR ANY OTHER APPLIANCE.

TABLE OF CONTENTS

PART 1. GENERAL INFORMATION

A. HOW IT OPERATES

The appliance product line is a high efficiency water heating product, requiring special venting and condensate removal precautions. All high efficiency condensing appliances will require more maintenance (cleaning) than their non-condensing counterparts. Failure to do so may result in damage to the appliance that is not covered under warranty. Failure to follow all of the instructions contained in this manual may also cause premature product failure that may not be covered under warranty.

This appliance has built-in freeze protection, automatically activating the circulation pump when the internal water temperature drops below 41°F. If the internal water temperature drops to 37°F, a burn cycle will be initiated and will shut down as soon as the supply water temperature has reached 50°F. **Power and gas must be left on for this function to operate.**

The appliance's primary controller is the HOT™ control platform. The HOT™ controller uses BCB and BDB boards to operate all functions of needed control and safety. It contains sophisticated logic that allows it to operate at very precise temperatures while minimizing burner on/off cycling. When multiple units are operated as a Cascade to handle a common load, the control logic contains the ability to control all of the units as efficiently as one. Cascade operation is a factory-installed and programmed option, requiring a field wiring connection between appliances for operation.

BCB=
the internal Boiler Control Board.

BDB =
the Boiler Display Board; human interface.

CCB =
the Cascade Control Board, located in the external box.

CDB =
the Cascade Display Board, human interface located in the face of the external box.

BCB—Boiler Control Board

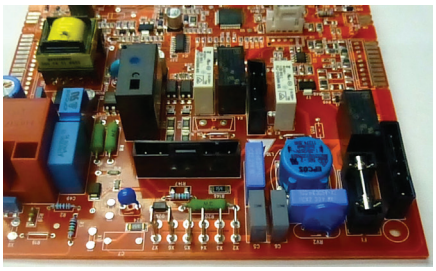

BDB—Boiler Display Board

CCB – Cascade Control Board

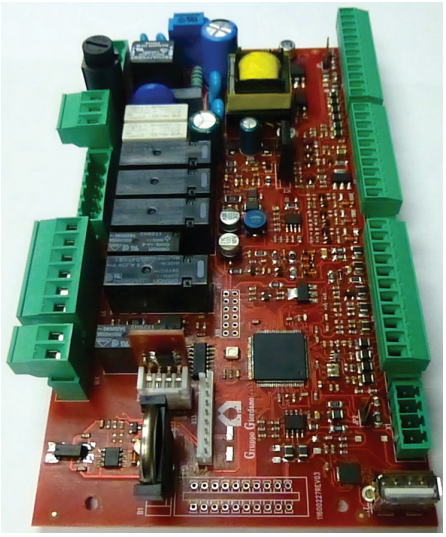

CDB - Cascade Display Board

EDB – Eeprom Data Board – contains all operating parameters of CCB and BCB

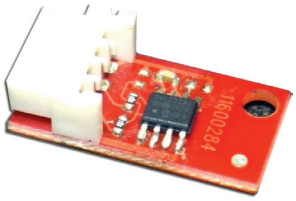

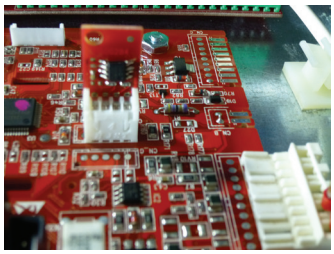

TYPICAL APPLIANCE DISPLAY AS PART OF A CASCADE

TYPICAL CASCADE DISPLAY

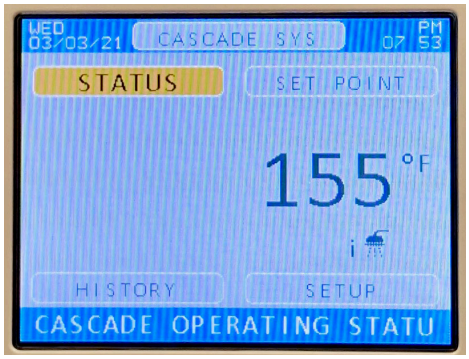

Typical Cascade display—Heating and Indirect Hot Water applications

TYPICAL STAND ALONE APPLIANCE DISPLAY

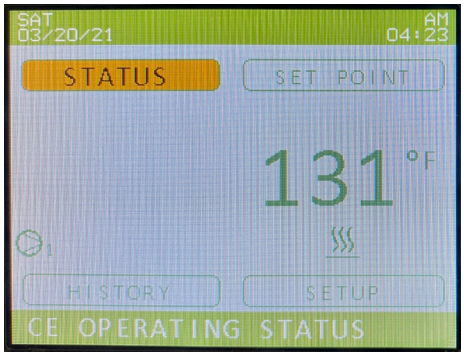

Typical stand-alone appliance display—Heating and Indirect Hot Water applications

The bottom of the display contains a scrolling message related to the current status of the system (Cascade Display), or the appliance

As a Stand Alone Appliance

HOT™ CONTROL MENU NAVIGATION

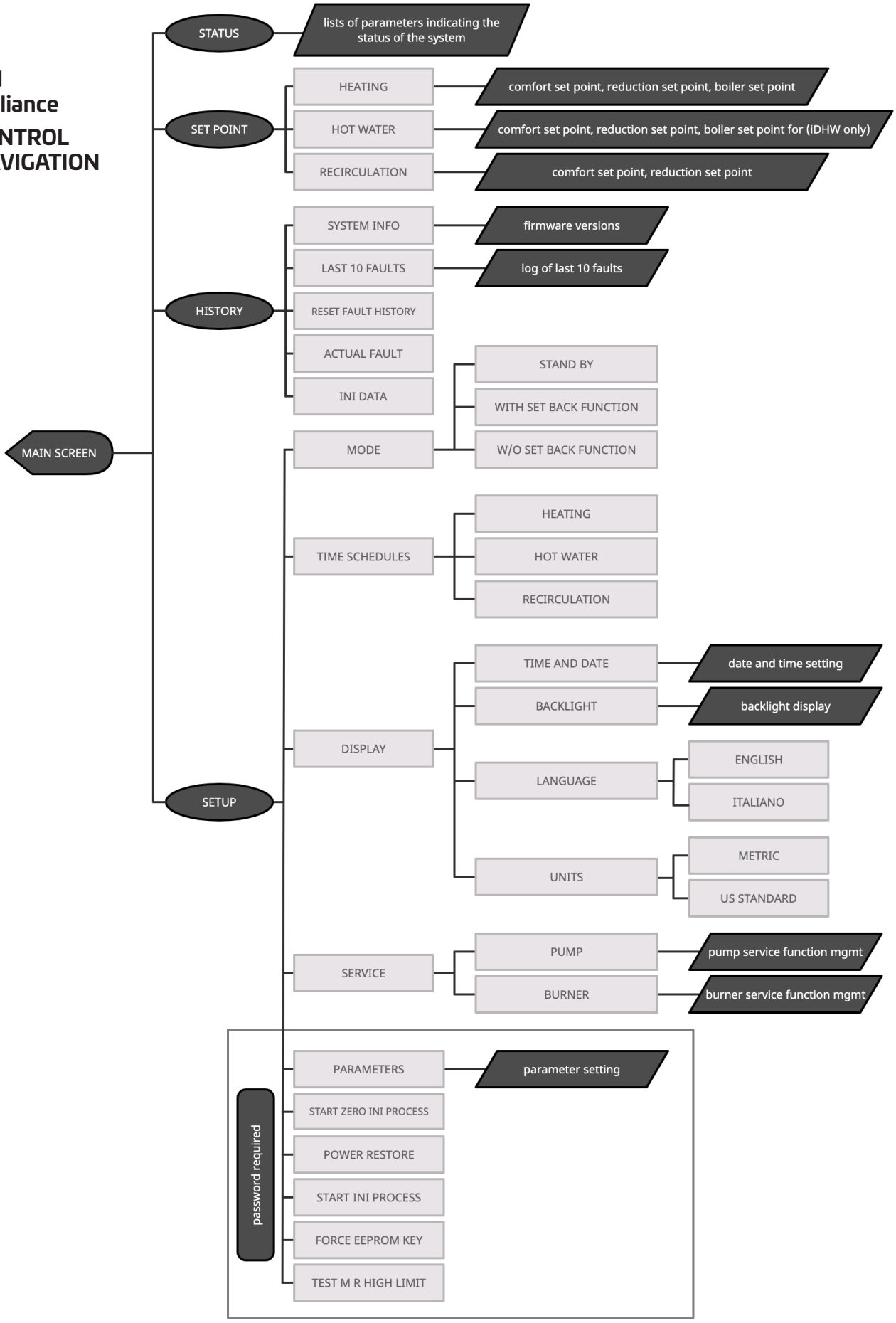

Appliance as Part of a Cascade

HOT™ CONTROL MENU NAVIGATION

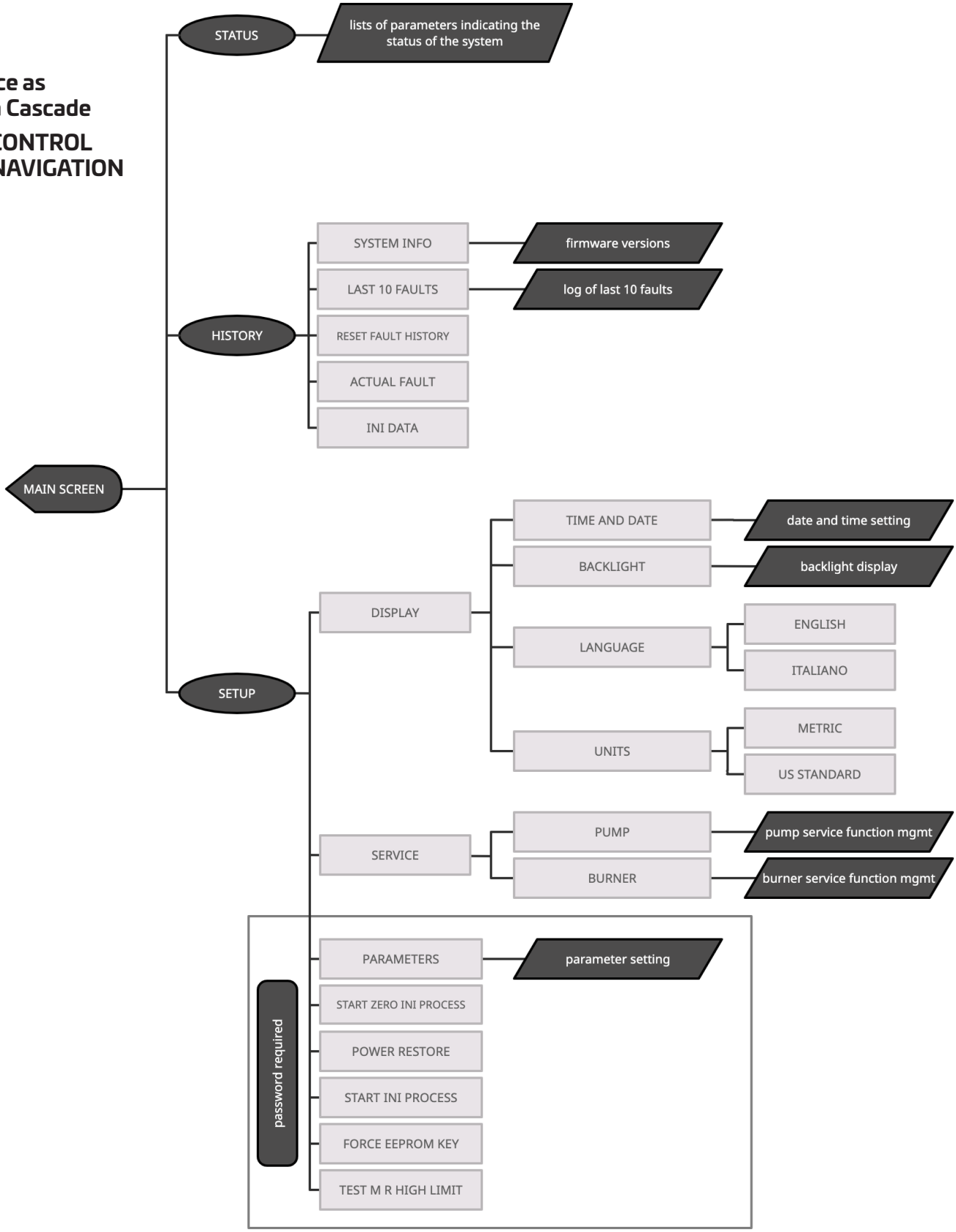

B. APPLIANCE CONTROLS

The following components are found on the control panel on the front of the appliance.

1) POWER on/off switch
2) Display/Interface

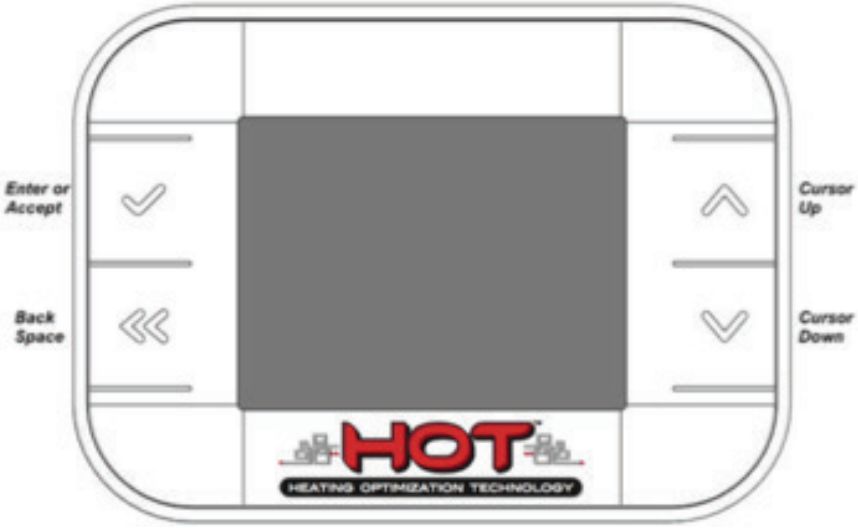

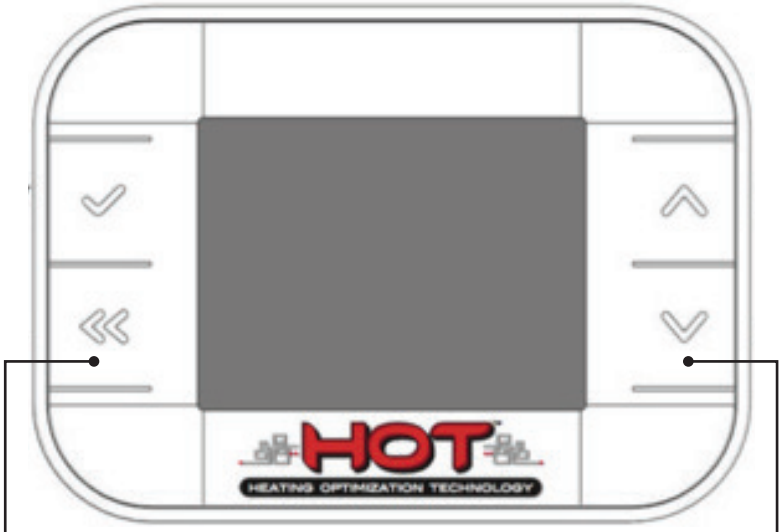

Press simultaneously while in SETUP area to activate Password Keyboard

(FIGURE 1–1)
APPLIANCE CONTROL PANEL

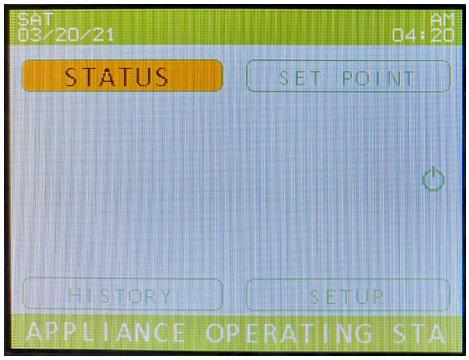

Standby Status

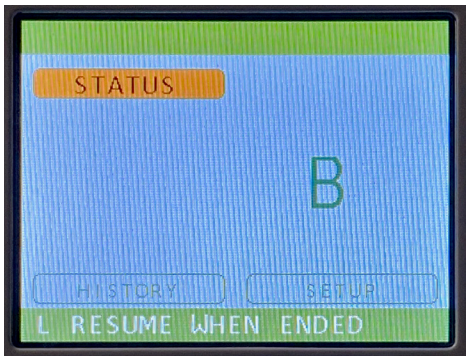

Normal Operating Status in Cascade

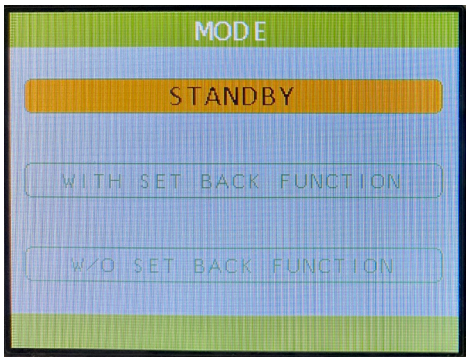

Normal Operating Status in single appliance

C. APPLIANCE CONTROL BOARD (BCB) SCREENS

In the main screen it is possible to see:

- Set point value
- Type of system (icons)
- Date and time
- Labels for navigation through the controller (STATUS, SET POINT, HISTORY, SETUP)
- Information and tips
- Alarms (soft lockout yellow and hard lockout red)

Navigation and settings are allowed by using the arrow, √ and BACK buttons.

Stand-By Mode:

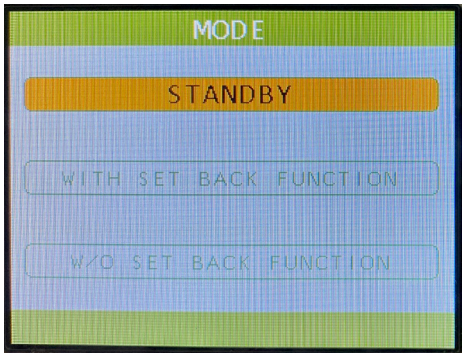

Operating Mode:

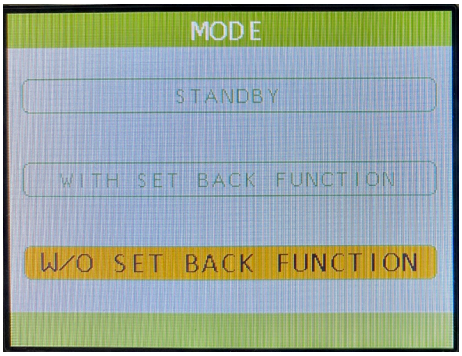

Burner On (flame icon):

SLO Warning and Pump On Icon:

HLO Warning and Pump On Icon:

Entering SETUP functions area:

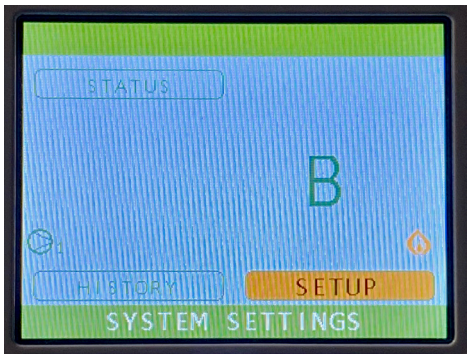

C. APPLIANCE CONTROL BOARD (BCB) SCREENS (continued)

In case of fault indication (SLO or HLO), the main page shows the code of the fault occurred. To see the extended description you have to go into HISTORY menu, where a new item "ACTUAL FAULT" will be displayed. In case an appliance RESET is required (HLO fault), it is possible to activate the RESET procedure entering the ACTUAL FAULT page and selecting the corresponding item.

HISTORY then to view ACTUAL FAULT:

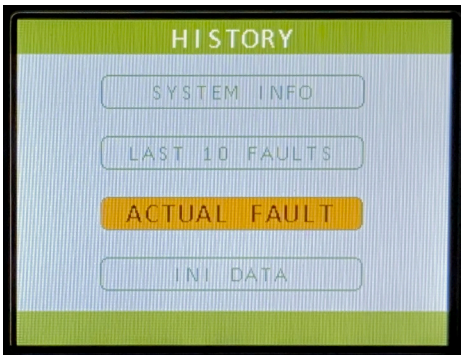

ACTUAL FAULT (HLO):

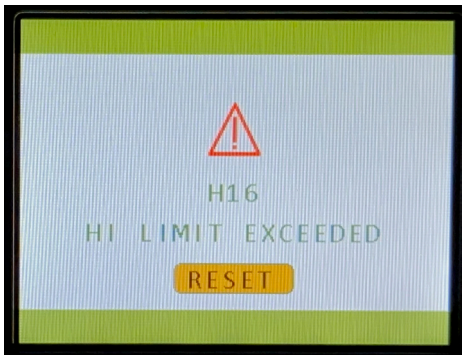

Click √ button to RESET fault:

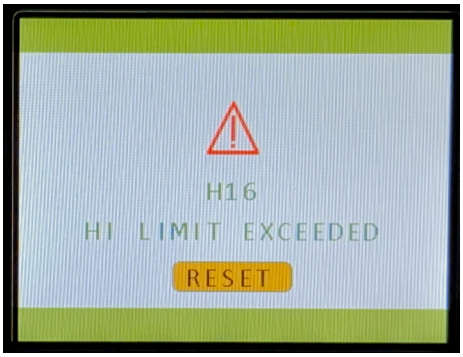

LAST 10 FAULTS (SLO):

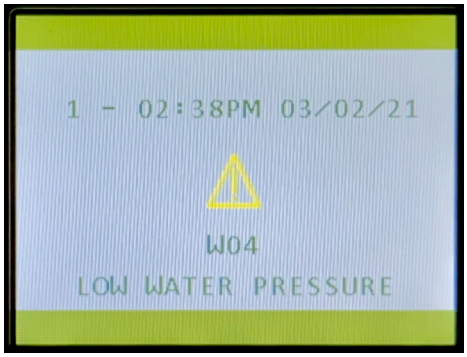

HISTORY then SYSTEM INFO:

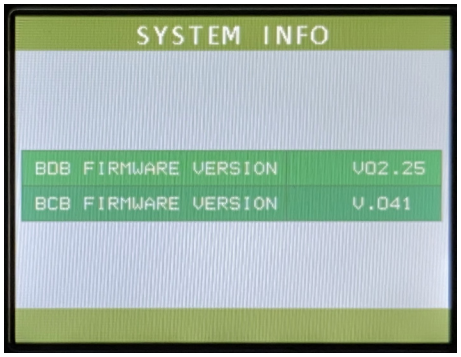

SETUP then enter password mode:

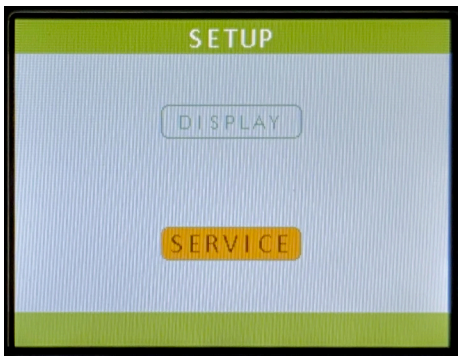

Press to enter password mode:

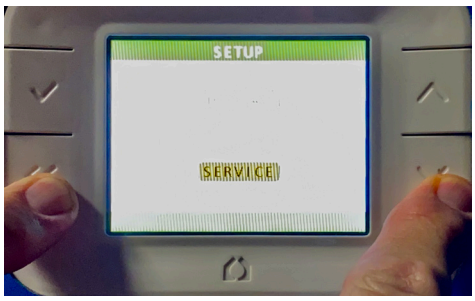

Press and hold simultaneously as shown

PASSWORD Keyboard:

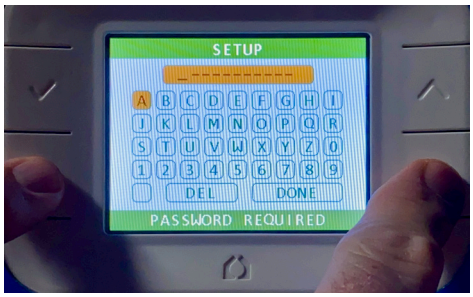

After reaching the letter you need, press the √ button then move to next

PASSWORD entered then DONE:

Options in PASSWORD MODE:

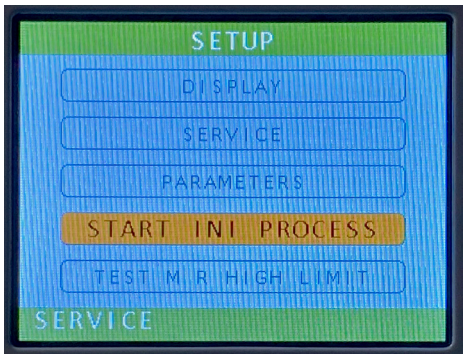

Home screen during INI process:

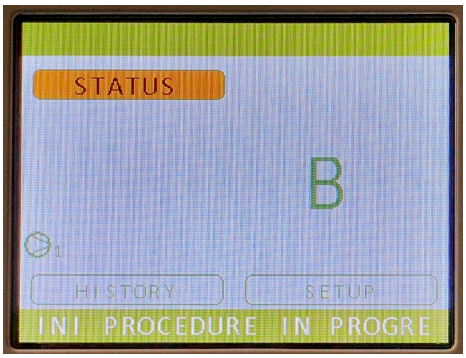

D. CASCADE DISPLAY FUNCTIONS

Standby Mode:

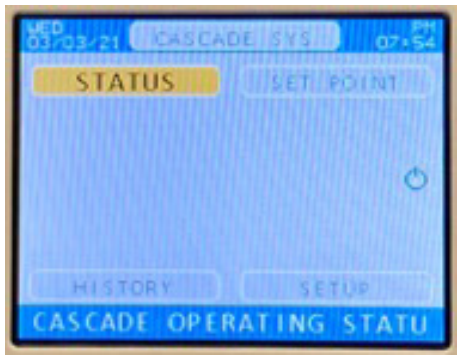

Operating Mode (no demand):

Icons here indicate what mode the appliance is in

One or more appliances on:

Flashing icon indicates demand in process (iDHW):

Flame icon indicates that the appliance is in a burn cycle—shows proof of flame rectification

One or more appliances HLO:

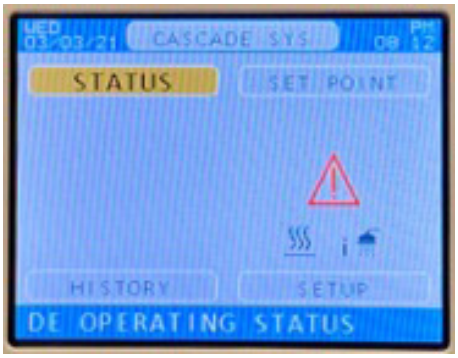

STATUS/CASCADE: Sensor S2 not connected

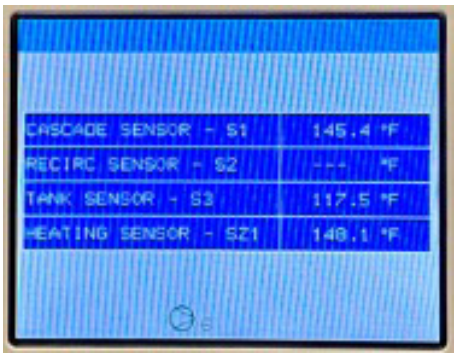

D. CASCADE DISPLAY FUNCTIONS (continued)

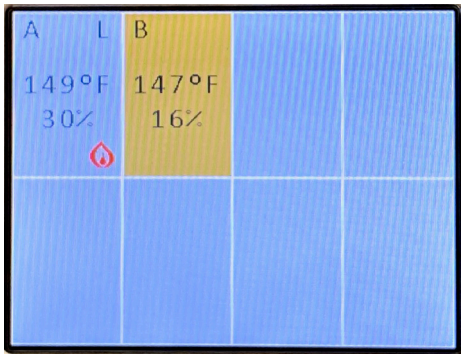

Appliance A is the lead as indicated by the L. The A appliance is also in a burn cycle illustrated by the flame icon. The fan speed is shown as a %. In common vent systems all appliances will have a minimum fan speed even if the appliance is not firing, as long is there is a call for heat.

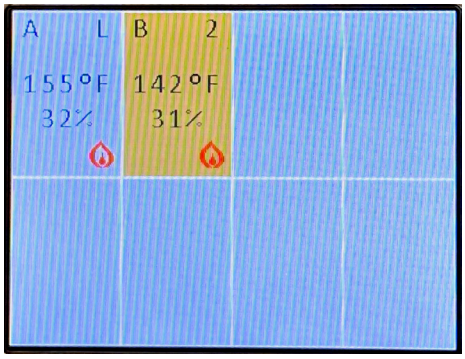

Both appliances are in a burn cycle. A is the lead and B is 2nd in line as indicated by the 2.

Display screen save mode:

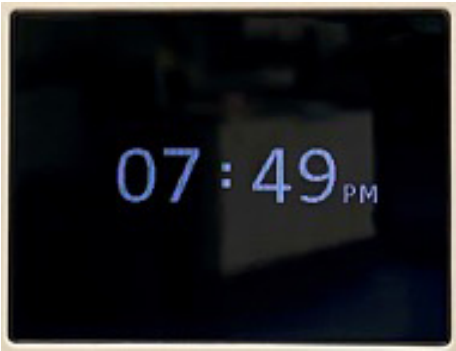

Screen save with fault on one or more appliance:

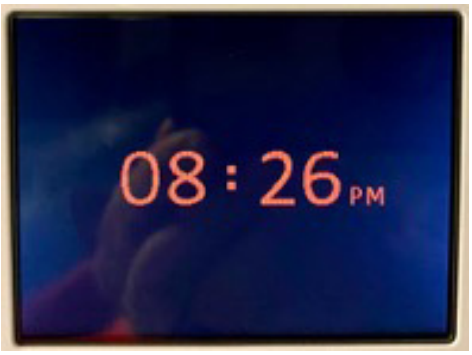

(TABLE 1-1) SENSOR TABLES

Number	Sensor Part Name - Part Number	Location - BCB - Boiler Control Board
T1.1	Supply temperature - Adjustable Manual Reset High Limit TST 75001	BCB - appliance outlet pipe
T1.2	Supply temperature p/n see above, duplex sensor	BCB - appliance outlet pipe
T2	Return temperature TST 75000	BCB - appliance header
T3*	Tank for iDHW and DHW temperature TST 76110	BCB to external component
T4*	Outdoor temperature TST 73010	BCB to external location
T5	Flue gas temperature TST 75002	BCB - appliance flue outlet
T6*	External system water temperature TST 76110	BCB - primary piping or Low Loss Header
TR1**	Fan Air Pressure transducer PTR 12323	BCB - fan outlet
TR2	Gas Inlet pressure transducer PTR 12304	BCB - gas valve inlet
TR3**	Return water pressure transducer PTR 1122E	BCB - appliance inlet pipe
TR4**	Supply water pressure transducer PTR 1122E	BCB - appliance outlet pipe
TR5**	Blocked drain/flue transducer PTR 12323	BCB - appliance condensate drain pipe

** = not used when Cascade control system is in use* *** = not used in EVO .3 Models*

Number	Temperature Sensor Part Name	Location - CCB - Cascade Control Board
S1	Cascade system sensor - linked to Pump 4	CCB - primary piping or Low Loss Header
S2	Load/Zone, DHW recirc sensor - linked to Pump 8	CCB Supply or return to zone with Pump 8, if the application is iDHW or DHW, it is used as the return line sensor to control Pump 8
S3	Tank iDHW or DHW sensor - linked to Pump 5	CCB - Cascade Control Board
S4	Load/Zone sensor - linked to Pump 6	CCB Supply or return to zone with Pump 6
S5	Load/Zone sensor - linked to Pump 7	CCB Supply or return to zone with Pump 7
S6	Outdoor sensor	CCB to external location
S7	Load/Zone sensor - linked to Pump 9	CCB Supply or return to zone with Pump 9

Note: All temperature sensors (T1.1–T6, S1–S7) are 10k thermistors, all pressure transducers (TR1–TR5) are 5vdc. Transducers are specific to their purpose; pressure range, accuracy and media being measured; gas, water or air/gas.

.3 models utilize a water flow switch and a pressure switch in lieu of TR1, TR3, TR4 and TR5.

E. GLOSSARY

APS
Air pressure switch

BCB
Boiler Control Board

BDB
Boiler Display Board

Blocking
Limit situation is touched, boiler OFF;
when the safe situation is restored, boiler On.

CCB
Cascade Control Board

CDB
Cascade Display Board

CH
Central Heating

Condensate
Water vapor generated as a product of combustion, which has a low pH.

DHL
Two independent sensors (high limit and outlet water) in a single well

iDHW
Indirect Domestic Hot Water

Diverter valve
Motorized valve with spring return

DHW
Direct Hot Water production (instantaneous)

Hard Lock Out (HLO)
A significant error or issue with the appliance or system, such as multiple failures to light or an unsafe pressure differential. An error code at this level will trigger a shutdown of the affected appliance(s). Service or repair is required.

HLO
Hard Lock Out—Manual reset needed to restart the appliance

HMI
Human Machine Interface

Hysterese
Blocking set temperature+ offset temperature—hysterese is starting temperature for the boiler.

ICM
Interface Cascade Manager (with or without WiFi)

Indirect Tank
Sanitary hot water tank with a built in heat exchanger often used as a component in an iDHW system

INI

Baseline data initialization, runs by default every 14 days

Masterless Lead-lag System
In a multi-appliance system this control system will work all connected appliances as one large team. This insures smooth distribution of the work load and even aging of all appliances connected within.

In addition, proprietary software manages common vented systems insuring equal back-pressure on all connected appliances and safe operation in the event of a component failure of one or more of connected appliances.

Modbus
For Ethernet or RS232 or RS485 bus system for Lead and Leg communication

Offset
Overriding temperature above set blocking: boiler OFF

PAVO
Zone controller

PCB
Printed circuit board—burner control board

Soft Lock Out (SLO)
Manual reset or appliance reset needed for restart

Tank
Domestic Hot Water Tank without internal heat exchanger

3-way-valve
Motorized valve: turning to the right and to the left

Parameter
P followed by a letter and number (Ex: PS18 = parameter S-18)

n.a.
Not applicable. Constant value.

TBD
To be defined

Z-INI
First INI process

F. DIMENSIONS

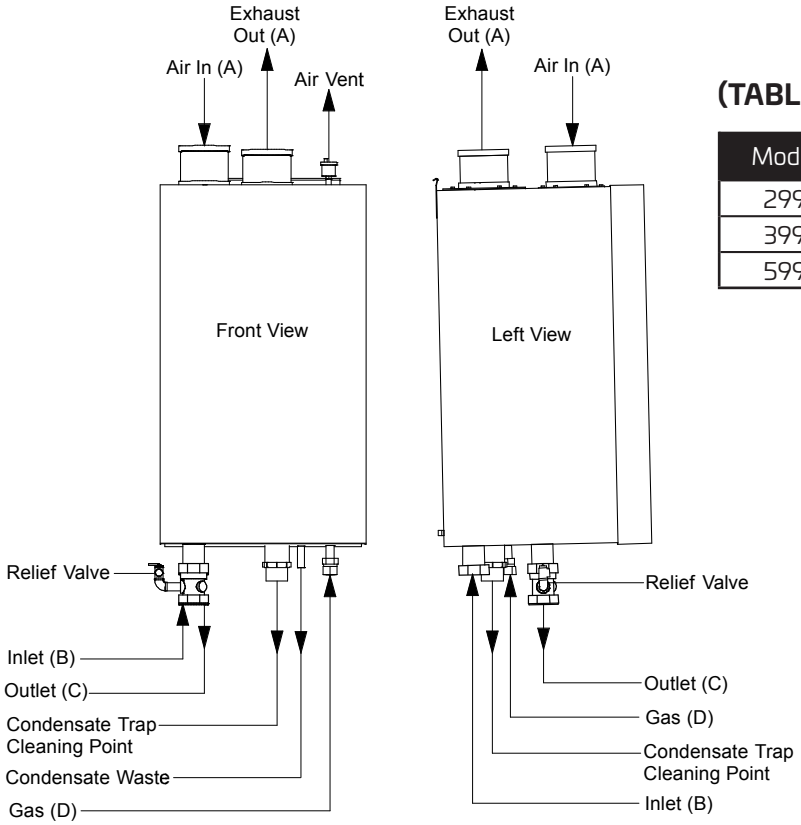

(TABLE 1-1) APPLIANCE DIMENSIONS

Model	Width	Height	Depth	A	B	C	D
299	19"	33"	19"	4"	1.5"	1.5"	0.75"
399	19"	33"	19"	4"	2"	2"	0.75"
599	19"	35"	26.5"	5"	2"	2"	1"

(TABLE 1-2) APPLIANCE INFORMATION

Model	Input BTU/hr	Water Heater* Output BTU/hr	Boiler** Output BTU/hr	GPH Recovery @ 100˚FΔT	GPH Recovery @ 80˚FΔT	GPH Recovery @ 60˚FΔT	Water Flow Rate & Pressure Drop DWH†	Heating	Shipping Weight
HW 299	300,000	up to 291,000	up to 285,000	360	450	600	16.5@22.9'	11.0@9.3'	172 lbs
HW 399	399,999	up to 387,999	up to 379,999	466	582	776	26.4@20.3'	17.6@8.5'	204 lbs
HW 599	630,000	up to 611,100	up to 598,500	734	917	1223	39.6@23.6'	26.4@9.4'	260 lbs

*At 97% thermal efficiency with 86ºF incoming water to heat exchanger
**At 95% thermal efficiency with 140ºF incoming water to heat exchanger

ELECTRICAL CHARACTERISTICS FOR PRODUCTS

208 Volt Power Supply

Model	Amps/unit	Boiler Pump	Total amps Boiler
HWH 299.2	2.70	0.88	3.59
HWH 399.2	4.34	0.88	5.23
HWH 599.2	5.47	1.11	6.58
HWH 299.3	2.70	0.88	3.59
HWH 399.3	4.34	0.88	5.23
HWH 599.3	5.47	1.11	6.58

240 Volt Power Supply

Model	Amps/unit	Boiler Pump	Total amps Boiler
HWH 299.2	2.34	0.77	3.11
HWH 399.2	3.76	0.77	4.53
HWH 599.2	4.74	0.96	5.70
HWH 299.3	2.34	0.77	3.11
HWH 399.3	3.76	0.77	4.53
HWH 599.3	4.74	0.96	5.70

Note: No load switching is possible directly from the BCB or CCB, it may only switch a relay signal.

F. DIMENSIONS (continued)

RECOMMENDED SERVICE CLEARANCES

(FIGURE 1-2) APPLIANCES CLEARANCES

(NOTE: THE APPLIANCE IS RATED AT ZERO CLEARANCE TO COMBUSTIBLES.)

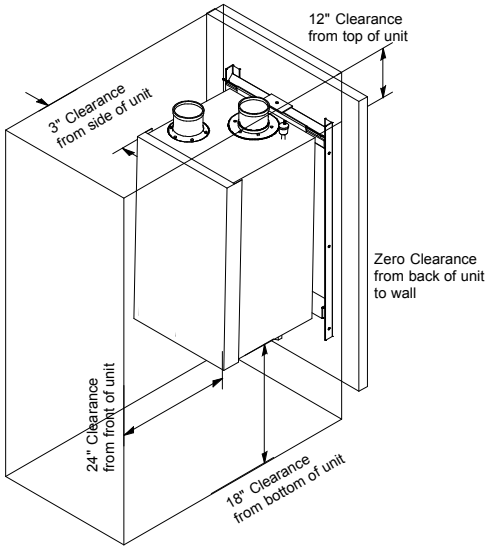

G. PRE-INSTALLATION REQUIREMENTS

The appliance models 299–599 are designed to be installed using a factory designed and supplied rack or frame (see Figure 1-3 for details). Consult factory for details of wall mount bracket. It can be installed in alcoves, basements, and utility rooms, as well as standard equipment rooms. Choose a location for your appliance, centralized to the piping system, along with consideration for Electrical (Part 2, Gas Connection (Part 3), Venting (Part 4), and Condensate Drain (Part 4, Section F).

The appliance rack must be level as installed, and the mounting surface must be designed to support the weight (see previous page, Table 1-2 for weights). Be sure the appliance is adequately secured to the mounting surface.

The front cover is secured by a threaded screw and two clasp style latches; it can only be installed one way. ***When removing the front cover of the appliance, you must make sure all electric power to the appliance is turned off***. Then remove the screw at the bottom of the panel, undo the latches and remove the cover (see Figure 1-4 on the next page).

If the appliance is set up for use on liquefied petroleum (LP) gas, some geographic areas follow the Uniform Mechanical Code, section 304.6, "Liquefied petroleum gas burning appliances shall not be installed in a pit, basement or similar location where heavier-than-air gas might collect. Appliances so fueled shall not be installed in a below grade under-floor space or basement ***unless such location is provided with an approved means for removal of unburned gas***."

Note: A water chemistry analysis should be performed prior to any installation. If the water quality exceeds any of the following levels, then a water chemistry analysis must be performed:

- ***Water hardness can be no more than 12 grains (205 ppm or mg/l)***
- ***TDS (total dissolved solids) can be no more than 450 ppm or mg/l***
- ***PH—below 6.5 or above 7.5***

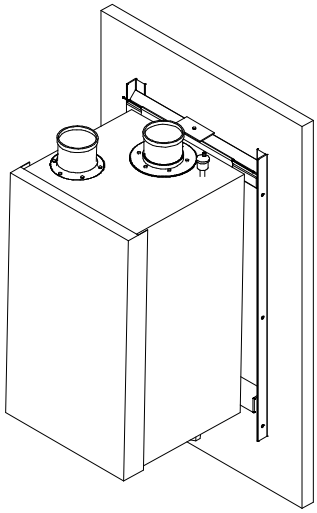

(FIGURE 1-3) MOUNTING DETAIL

For total combined hardness over 15 grains (250 ppm or mg/l) or longer pipe lengths, contact the Manufacturer for correct pump sizing. Combined, the hardness and TDS can be no more than 450 ppm. Our internal term for this is the TCH (Total Combined Hardness).

#1 TURN OFF POWER TO UNIT
Turn off power at the breaker supplying power to the appliance. In a factory supplied Cascade package, turn off at the Intermediate Disconnect.

Just turning off the on-off switch on the front of the appliance does not eliminate all power from within the appliance cabinet and electrical shock hazard still exists.

#2 REMOVE BOTTOM SCREW(S)

(FIGURE 1-4)

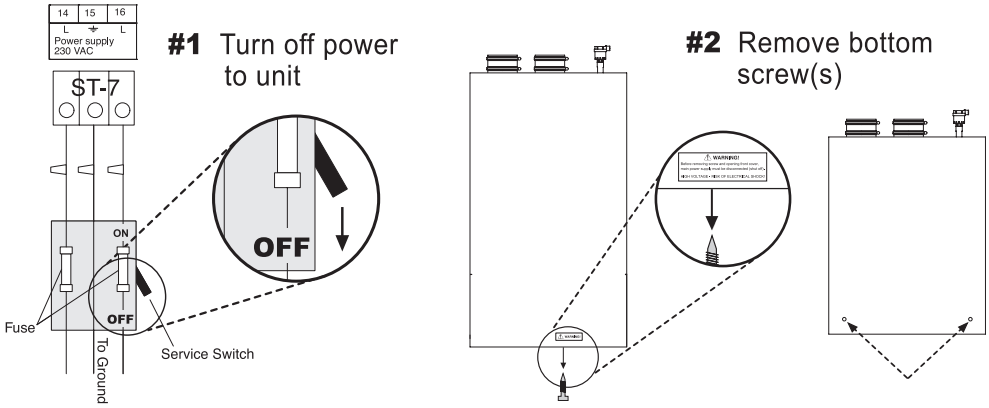

Remove screw from cabinet bottom through door casing

⚠ WARNING

The appliance is certified as an indoor appliance. Do not install outdoors or in a location where it will be exposed to freezing temperatures. This includes all related piping and components. If the appliance is subjected to flood water or submersed in water, the appliance must be replaced.

⚠ NOTICE

Condensation Removal: This is a condensing, high efficiency appliance, therefore condensation removal must be addressed to avoid damage to surrounding area or appliance. See Part 4, Section F for Condensate Requirements.

H. PRESSURE RELIEF VALVE

⚠ WARNING

Do not, under any circumstances, thread a cap or plug into the relief valve! Explosion, severe personal injury, death, or major property damage may result.

This unit is supplied with a relief valve sized in accordance with ANSI/ASME Heater and Pressure Vessel Code, Section IV. The relief valve is installed near the hot water outlet. If the valve supplied is replaced, the pressure rating of the valve must not exceed the listed working pressure of this appliance, and must be rated to the proper BTU/hr capacity of the water heater. ***Do not, under any circumstances, thread a cap or plug into the relief valve! Explosion, serious injury or death may result!*** To prevent water damage, the relief valve piping must be directed to the floor or an open drain, but not connected directly. There must be a 6" space between the outlet of relief valve piping and drain or floor. Do not hook up to drain system directly without an air gap. Protect from freezing. Place no other valve between the relief valve and the unit. Do not install any reducing couplings or other restrictions in the discharge line. The discharge line must allow complete drainage of the valve and line. Manually operate the relief valve at least once a year.

Also, care must be exercised when choosing the location of this appliance, where leakage from the relief valve, leakage from related piping, or leakage from the tank or connections, will not result in damage to the surrounding areas, or to the lower floors of the building. A water heating appliance should always be located in an area with a floor drain or installed in a drain pan suitable for water heating appliances. Under no circumstances, shall the Manufacturer be held liable for any such water damage whatsoever.

PART 2. ELECTRICAL

A. ELECTRICAL CONNECTION / REQUIREMENTS

The electrical connection for the appliance is on the bottom of the unit. There is a 1/2" knockout location for an electrical connection for the appliance's incoming power connection. All electrical wiring must be performed by a qualified licensed electrician in accordance with National Electrical Code ANSI/NFPA and/or the Canadian Electrical Code, Part 1 CSA C22.1, or to any applicable local codes and standards. For your convenience, all the points for electrical connections needed to operate the appliance are labeled.

NOTE: Always check electrical ground to known earth ground; if less than 0.5 ohms, ground is sufficient (meter MUST be on lowest setting).

We recommend a simplified test, differing from one looking for building earth ground issues, it is our intent to use this test as an indicator of equipment room electrical grounding issues, or equipment bonding issues, not prove the earth ground to the building.

Take an Ohm meter and place one lead on a known earth ground (not the ground wire on the appliance), and place the other lead on 1) The near appliance system piping, 2) The appliance heat exchanger, or 3) The appliance cabinet.

If any of those readings exceed 0.5 Ohms, then it is a good indicator that there may be sufficient stray current flowing through the water in the piping system to accelerate or amplify conditions that can cause pump, appliance or piping issues in the not too distant future.

If any readings are over 0.5 ohms, an electrician should be brought in to correct the problem.

The electrical requirements are for standard 208–240 volt split phase, 50/60 Hz 15 Amp service. When the unit is first powered on, there is a self-setting of the electronics for 50 Hz or 60 Hz. At every power up, the electronics will take a couple of seconds to compare the pulses of the power to the pulses of the crystal, which is built into the electronics. Then all time-related functions are correct no matter the power source.

The standard supplied pumps are all 208–240 VAC, 60 cycle and are to be wired to terminals indicated on the appliance. In 50 cycle applications, other pumps may need to be supplied, depending on water conditions.

B. INTERNAL WIRING CONNECTION

⚠ CAUTION

The incoming power shall be connected directly to the labeled, intended connection points only. Failure to do so may result in an electrical short and the control board will have to be replaced!

⚠ DANGER

It is extremely important that this unit be properly grounded! It is very important that the building ground is inspected by a qualified electrician prior to making this connection!

Failure to confirm proper grounding and the absence of stray voltage may result in premature component failure. See start up and commissioning documents (*LIT91111–Start Up Checklist)* for details.

Terminal G (see Appendix) in the electrical compartment must be connected to the building ground system.

The incoming 208–240 volt split phase power supply is connected to terminals L1, L2, N and ground, see drawings in Part 2, Section B.

It is important that the electrical power is not turned on at this time. Double check all connections and then turn the power on. The display that is provided with the appliance should now be reading the Setpoint temperature.

NOTE: See Start-Up Procedures (Part 6, Section D) to change the temperature setting or run the appliance.

B. INTERNAL WIRING CONNECTION (continued)

BCB .3 LAYOUT

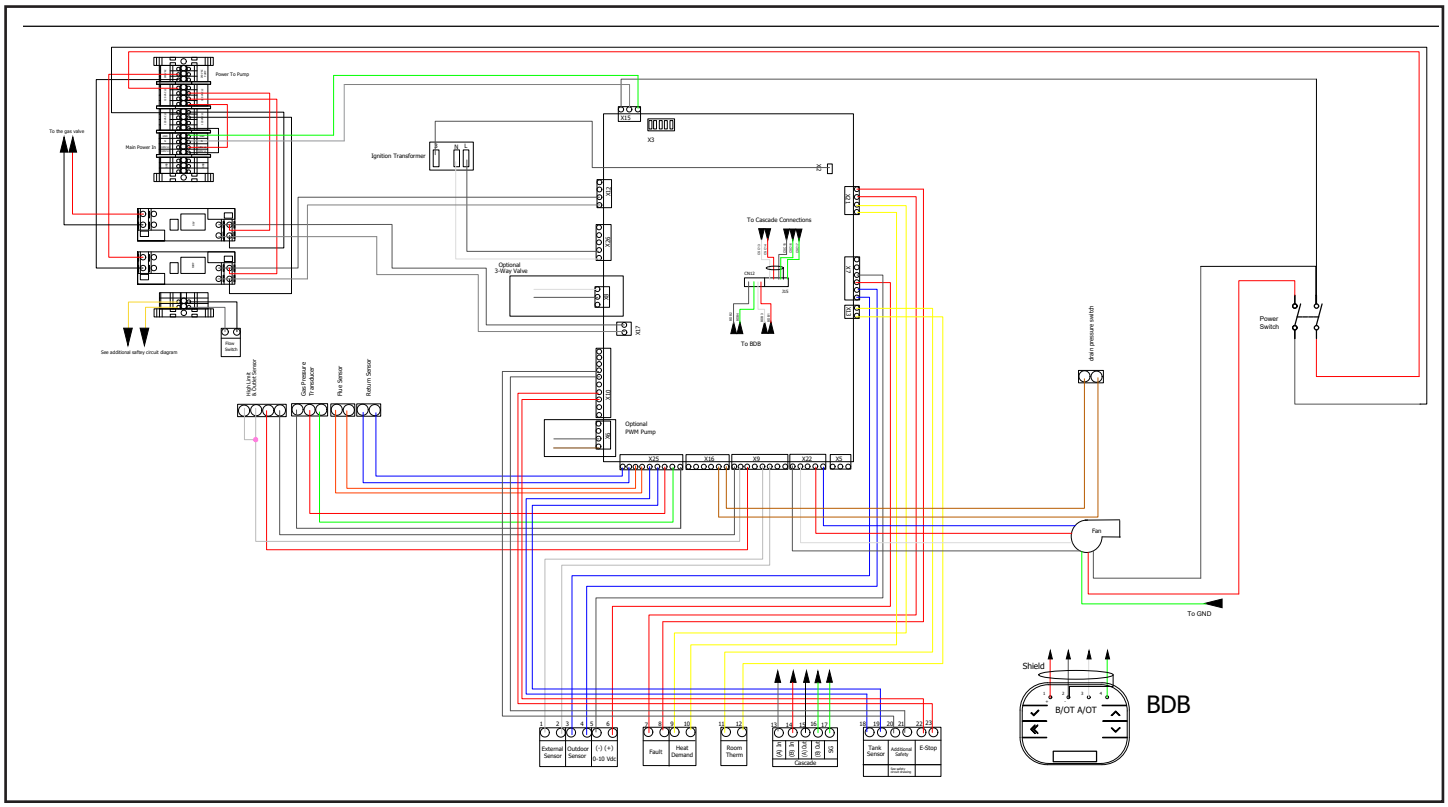

BCB .2 LAYOUT

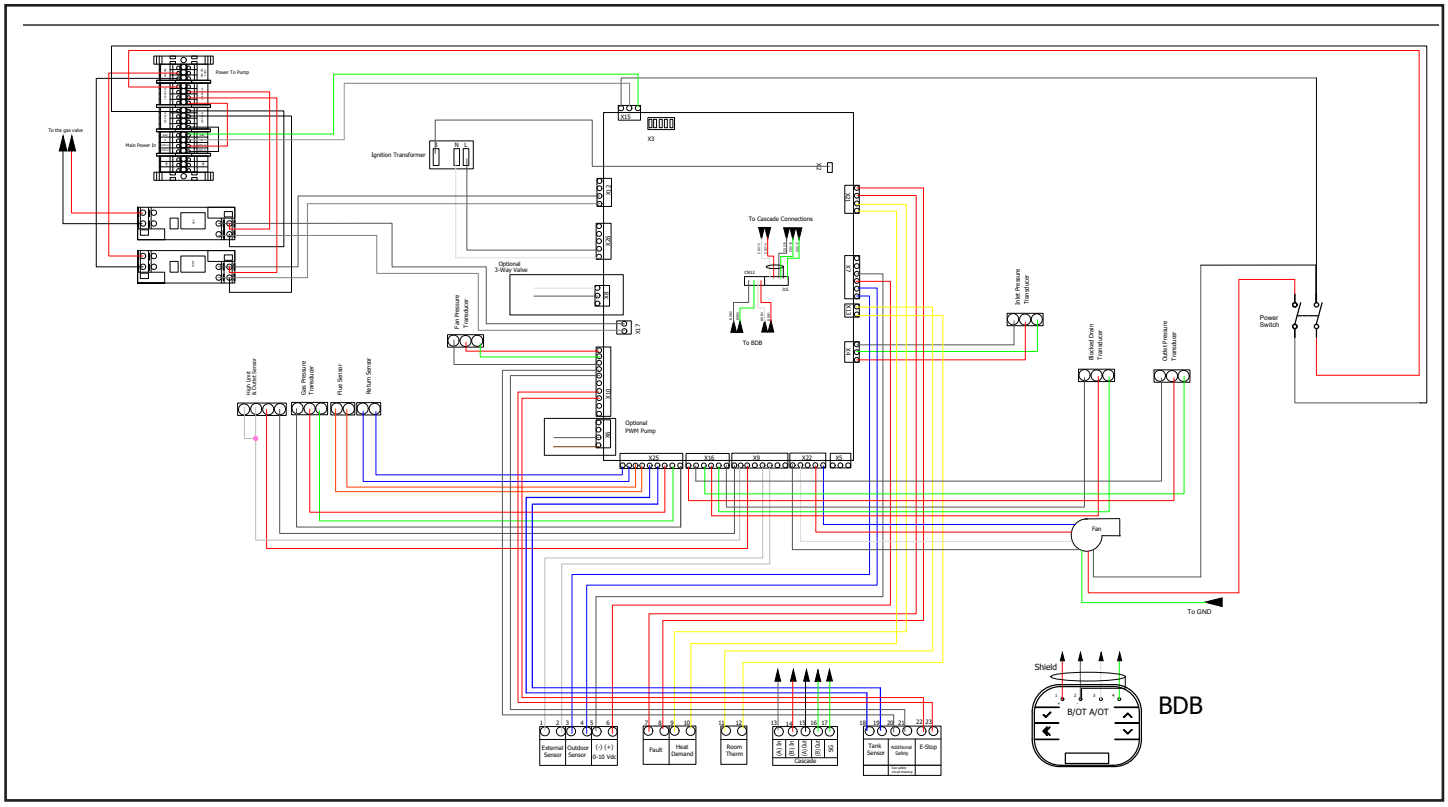

B. INTERNAL WIRING CONNECTION (continued)

ADDITIONAL SAFETY CIRCUIT

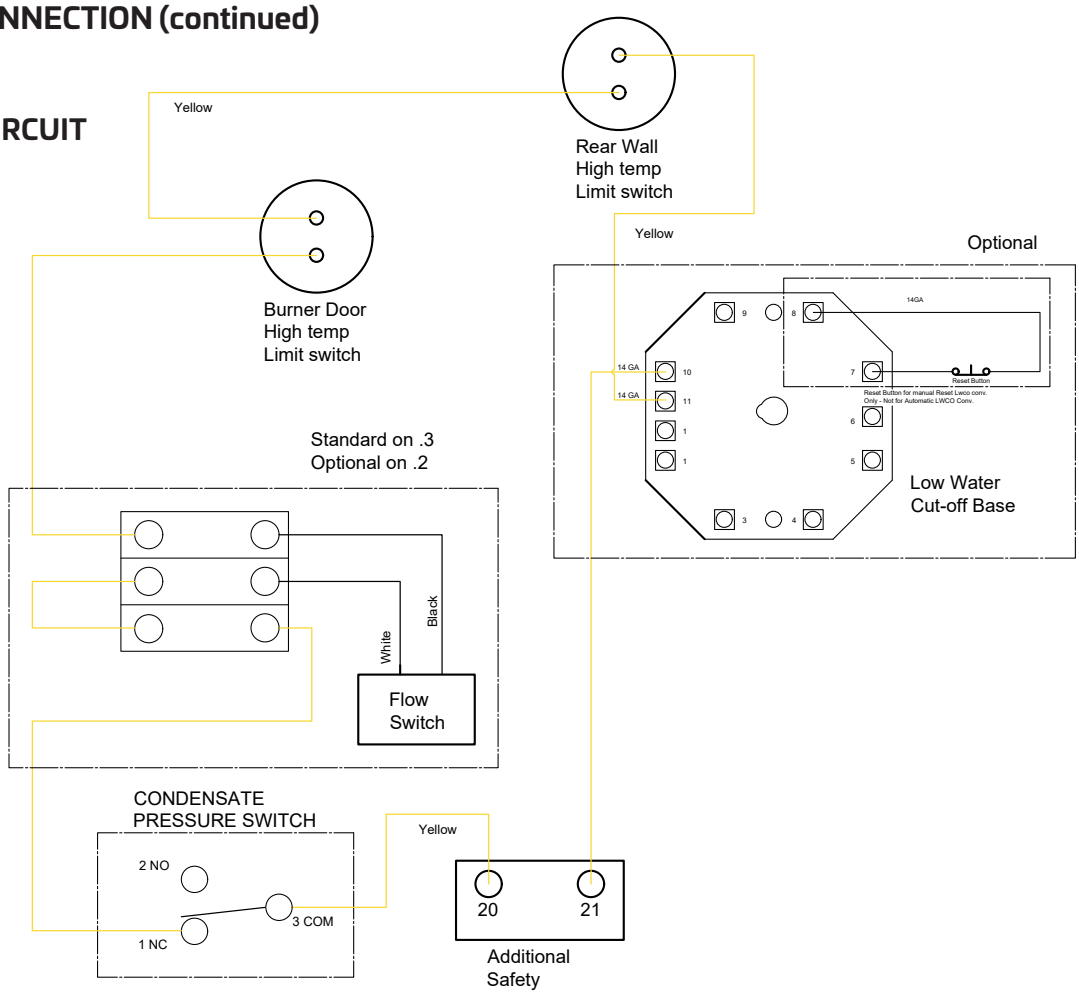

(FIGURE 2-1) .2 FIELD WIRING CONNECTIONS

A. Terminals 1 & 2
External Sensor Connection (T6) — System temperature sensor, senses water temp in a heating loop.

B. Terminals 3 & 4
Outdoor Sensor (T4) — Outdoor air sensor, set point will adjust based on outdoor air temperature (not needed if 0-10 VDC output is connected)

C. Terminals 5 & 6
0–10 VDC — Connect a 0–10 VDC output here to vary set point temperature. Requires a connection to each appliance.

D. Terminals 7& 8
Fault Service — Alarm bell or light may be connected here to indicate that the appliance is a hard lockout.

E. Terminals 9 & 10
Additional Heat Demand — dry contacts that will close a thermostat on an extra appliance if the appliance is at 100% of capacity.

F. Terminals 11 & 12
Room Thermostat — Normally jumped. A room thermostat may be connected here to enable/disable the appliance.

G. Terminal 13–17
Cascade Connection — Communication cables get connected here and "daisy chained" to all appliances in a cascade. This is polarity sensitive.

H. Terminals 18 & 19
Tank Sensor (T3) — Sensor for indirect or direct DHW. An aquastat may also be connected here.

Terminals 20 & 21
Additional Safety Circuit. On .3 models, it contains the Water Flow Switch; the burner door and rear wall high limits in series.

I. Terminals 22 & 23
E-stop—Requires a parallel wiring connection between appliances back to E-stop switch at rom wall.

Note: All incoming electrical power and outgoing pump connections are located on the internal power and relay block as shown on the following page.

CASCADE BOX

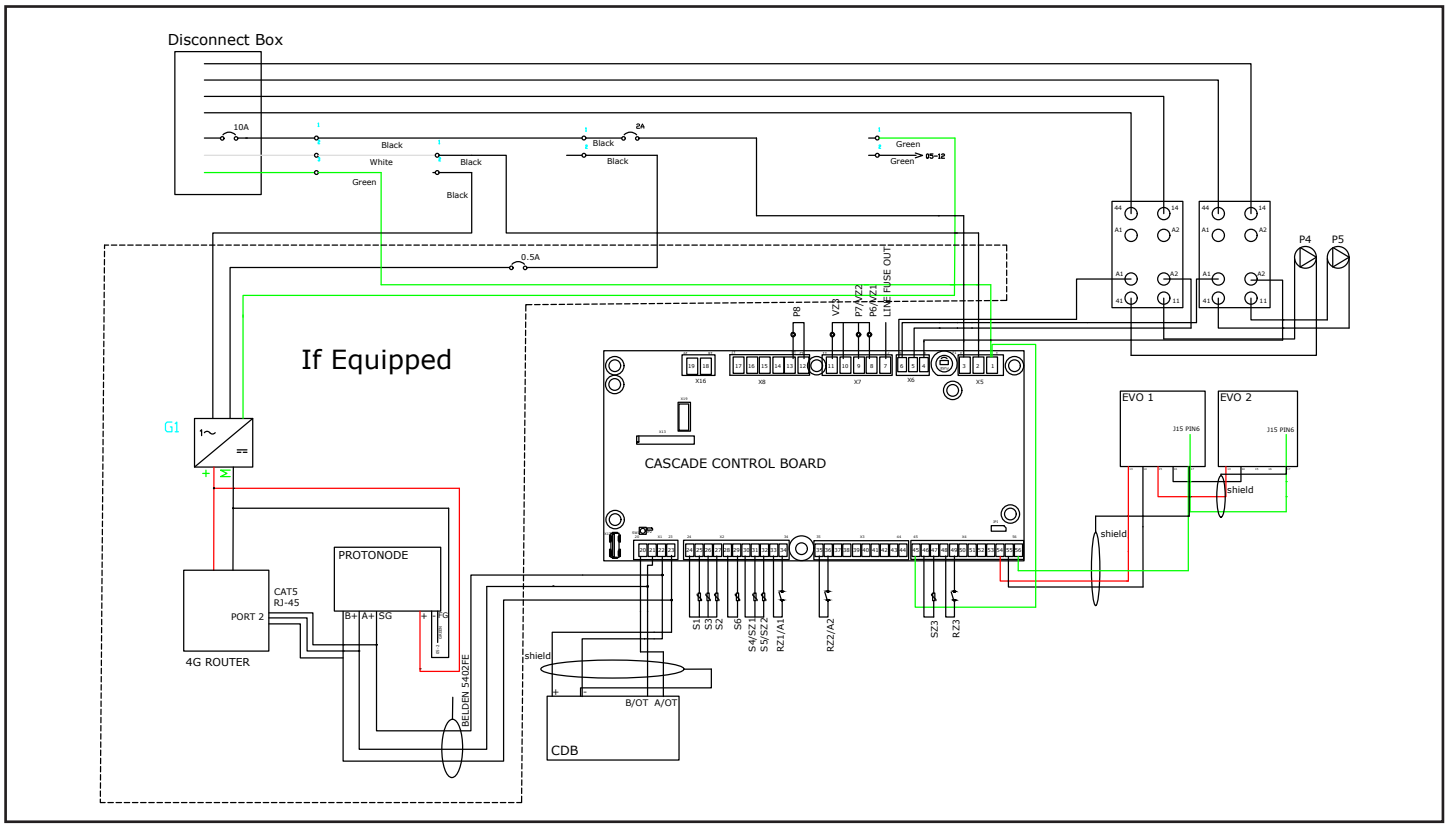

		Outputs Controlled						Switches			Sensors/input signals						
Parameter CCS1	System Description	P4 - CCB 4, 6	P5 - CCB 5, 6	P6 - CCB 8, 10	P7 - CCB 9, 10	P8 - CCB 12, 13	P9/VZ3 - CCB 10, 11	Enable / Disable CCB 33, 34	Enable / Disable CCB 35, 36	Enable / Disable CCB 48, 49	S1 - CCB 24, 25	S2 - CCB 24, 27	S3 - CCB 24, 26	S4 - CCB 30, 31	S5 - CCB 30, 32	S7/SZ3 - CCB 46, 47	S6 - CCB 28, 29
0	Heating only (CH)	x CH		x VZ1	x VZ2		x VZ3	x A1	x A2	x RZ3	x Cascade			x SZ1	x SZ2	x SZ3	x Outdoor
1	Heating with Indirect Hot Water and Recirculation		x iDHW	x VZ1	x VZ2	x Recirc	x VZ3	x A1	x A1	x RZ3	x Cascade	x Recirc	x iDHW	x SZ1	x SZ2	x SZ3	x Outdoor
2	Direct Hot Water and Recirculation					x Recirc						x Recirc	x DHW				
3	Indirect Hot Water and Recirculation		x iDHW			x Recirc		x A1	x A2	x RZ3	x Cascade	x Recirc	x iDHW				
4	iPool			x iPool				X A1 (HL)			x Cascade			x iPOOL			
5	iSPA				x iSPA				X A2 (HL)		x Cascade				x iSPA		
6	iPool and iSPA	x iPool	x iSPA	x iPool	x iSPA			X A1 (HL)	X A2 (HL)		x Cascade			x iPOOL	x iSPA		
7	One Heating zone and iPool	x iPool		x iPool			x CH	X A1 (HL)		x RZ3	x Cascade			x iPOOL		x CH	x Outdoor
8	One Heating zone and iSPA		x iSPA		x iSPA		x CH		X A2 (HL)	x RZ3	x Cascade				x iSPA	x CH	x Outdoor
9	One Heating zone and iPool and iSPA	x iPool	x iSPA	x iPool	x iSPA		x CH	X A1 (HL)	X A2 (HL)	x RZ3	x Cascade			x iPOOL	x iSPA	x CH	x Outdoor
10	iDHW and iPool and Recirculation	x iPool		x iPool		x Recirc	x iDHW	X A1 (HL)			x Cascade	x Recirc	x iDHW	x iPOOL			
11	iDHW and iSPA and Recirculation		x iSPA		x iSPA	x Recirc	x iDHW		X A2 (HL)		x Cascade	x Recirc	x iDHW		x iSPA		
12	iDHW and iPool and iSPA and Recirculation	x iPool	x iSPA	x iPool	x iSPA	x Recirc	x iDHW	X A1 (HL)	X A2 (HL)		x Cascade	x Recirc	x iDHW	x iPOOL	x iSPA		

PART 3. GAS CONNECTION

A. GAS CONNECTION AND INSPECTION

⚠ DANGER

FAILURE TO FOLLOW ALL PRECAUTIONS COULD RESULT IN FIRE, EXPLOSION OR DEATH!

The gas supply shall have a maximum inlet pressure of less than 14" water column (1/2 PSI) (3.44 kPa), and a minimum of 4" water column. The entire piping system, gas meter and regulator must be sized properly to prevent pressure drop greater than 1" as stated in the National Fuel Gas Code. This information is listed on the rating plate. **It is very important that you are connected to the type of gas as noted on the rating plate**, "LP" for liquefied petroleum, propane gas or "Nat" for natural or city gas. All gas connections must be approved by the local gas supplier, or utility in addition to the governing authority, prior to turning the gas supply on. It is mandatory that a drip leg be fabricated, as per the National Fuel Gas code. Once all the inspections have been performed, the piping must be leak tested. It is recommended that a soapy solution be used to detect leaks. Bubbles will appear on the pipe to indicate a leak is present. If the leak test requirement is a higher test pressure than the maximum inlet pressure, you must isolate the appliance from the gas line. In order to do this, you must shut the gas off using factory and field-installed gas cocks (following the lighting instructions in Part 6, Section B) This will prevent high pressure from reaching the valve. Failure to do so may damage the gas valve. In the event the gas valve is exposed to a pressure greater than 14" water column, the gas valve must be replaced.

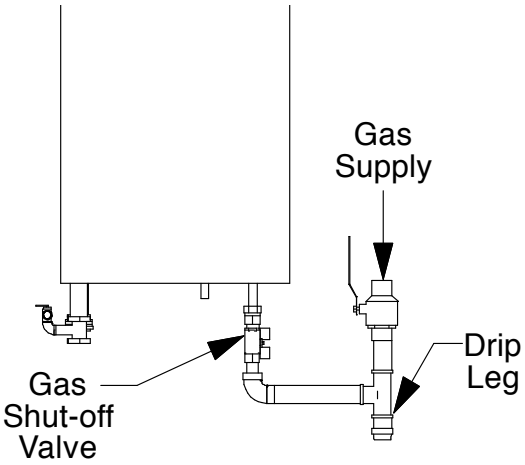

(FIGURE 3-1) APPLIANCE GAS CONNECTION

Never use an open flame (match, lighter, etc.) to check gas connections.

B. GAS PIPING

The gas piping must be sized for the proper flow and length of pipe, to avoid pressure drop. Both the gas meter and the gas regulator must be properly sized for the total gas load. If you experience a pressure drop greater than 1" WC, the meter, regulator or gas line is undersized or in need of service. You can attach a manometer to port 3 of the gas valve (see Figures 3-2 and 3-3 on the following page). Alternatively, you can attach the manometer to the incoming gas drip leg, by removing the cap and installing the manometer. The gas pressure must remain between 4" and 14" during stand-by (static) mode and while in operating (dynamic) mode. **If an in-line regulator is used, it must be a minimum of 10 equivalent feet from the appliance. It is very important that the gas line is properly purged by the gas supplier or utility. Failure to properly purge the lines or improper line sizing, will result in ignition failure.** This problem is especially noticeable in NEW LP installations and also in empty tank situations. This can also occur when a utility company shuts off service to an area to provide maintenance to their lines. This gas valve must not be replaced with a conventional gas valve under any circumstances. As an additional safety feature, this gas valve is easily de-coupled from the fan inlet.

Refer to the following tables to size the supply piping to minimize pressure drop between meter or regulator and unit.

C. GAS TABLES

(TABLE 3-1) NATURAL GAS SUPPLY PIPING

Nominal Iron Pipe	Internal Diameter	Length in Pipe (feet)													
Size (in)	Inches	10	20	30	40	50	60	70	80	90	100	125	150	200	BTUs per HR x 1,000
3/4	0.824	363	249	200	171	152	138	127	118	111	104	93	84	72 }	
1	1.049	684	470	377	323	286	259	239	222	208	197	174	158	135 }	
1-1/4	1.380	1,404	965	775	663	588	532	490	456	428	404	358	324	278 }	
1-1/2	1.610	2,103	1,445	1,161	993	880	798	734	683	641	605	536	486	419 }	
2	2.067	4,050	2,784	2,235	1,913	1,696	1,536	1,413	1,315	1,234	1,165	1,033	936	801 }	

(Based on 0.60 specific gravity for natural gas at 0.5" WC pressure drop; DOE standard is 1100 BTU per cubic foot of natural gas.)

1 Run the gas supply line in accordance with all applicable codes.

2. Locate and install manual shut off valves in accordance with state and local requirements.

(TABLE 3-2) PROPANE SUPPLY PIPING (BASED ON 11" WC SUPPLY PRESSURE)

Nominal Iron Pipe	Internal Diameter	Length of Pipe (Feet)													
Size (in.)	(inches)	10	20	30	40	50	60	70	80	90	100	125	150	200	BTUs per HR x 1,000
3/4	0.824	567	393	315	267	237	217	196	185	173	162	146	132	112 }	
1	1.049	1,071	732	590	504	448	409	378	346	322	307	275	352	213 }	
1-1/4	1.380	2,205	1,496	1,212	1,039	913	834	771	724	677	630	567	511	440 }	
1-1/2	1.610	3,307	2,299	1,858	1,559	1,417	1,275	1,181	1,086	1,023	976	866	787	675 }	
2	2.067	6,221	4,331	3,465	2,992	2,646	2,394	2,205	2,047	1,921	1,811	1,606	1,496	1,260}	

D. GAS VALVE SETUP

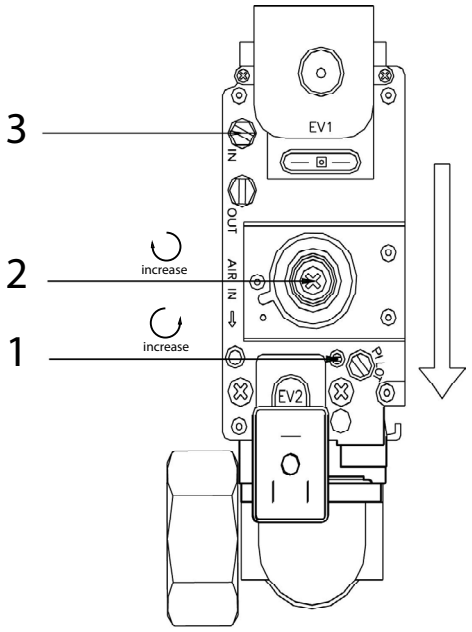

(FIGURE 3-2)
MODELS 299–399

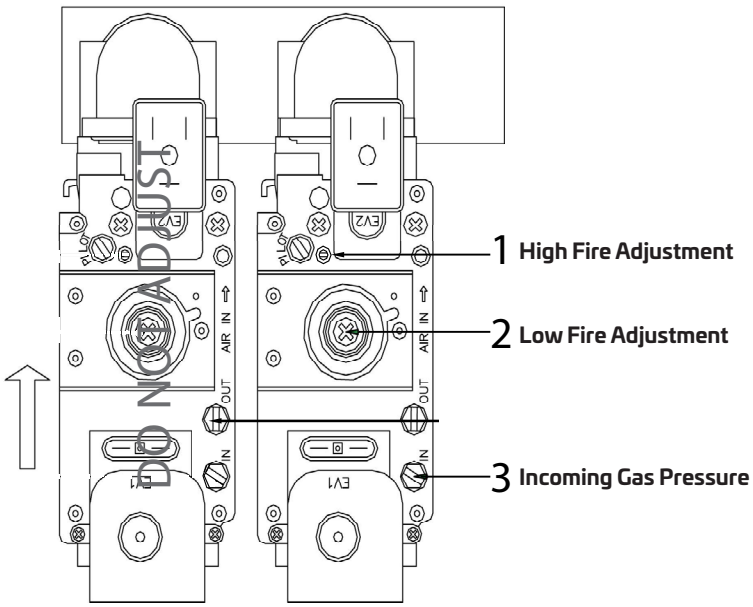

(FIGURE 3-3)
MODEL 599

D. GAS VALVE SETUP (continued)

Please see Part 6—Start-Up Procedures before continuing!

Proper gas volume and pressure is critical to the operation of any high efficiency appliance. There are three types of measurements that must be taken to provide the data to insure product performance:

- Lock-up pressure (pressure in gas piping at appliance inlet with no load) may not exceed 14" wc. at any time!
- Minimum load at ignition of a single unit in a multiple unit rack
- Maximum load—all appliances on at full fire that are being tested and any other gas fired equipment on the same gas supply.

How and where to measure:

- All gas pressure tests must be taken at the gas manifold inlet, external to the appliance (see diagram).
- Gas pressure for minimum load should be measured the moment after the gas valve opens on a single appliance, and recorded.
- Gas pressure for maximum load shall be measured with all units on at full fire and all other connected loads on that gas supply running
- Gas pressure drop shall not exceed 1" wc. between minimum load and maximum load as described above.

NOTE: Inlet gas pressure at the gas valve, may also be read on the BDB (Display screen) under the STATUS screen during all operations.

(FIGURE 3-4) GAS PRESSURE TESTING POINTS

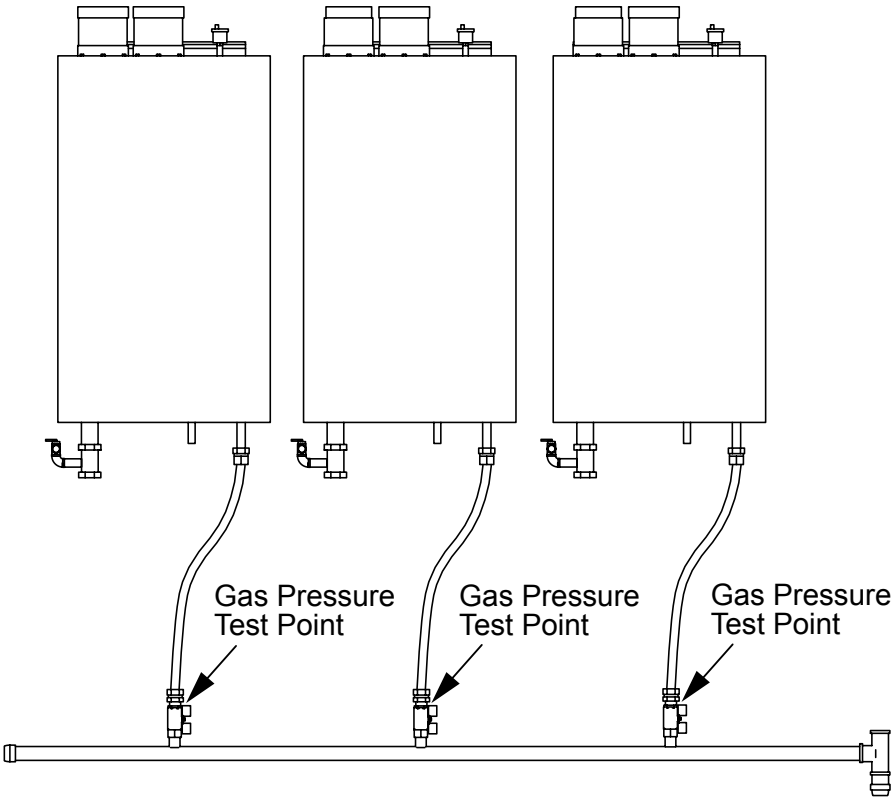

(TABLE 3-3) COMBUSTION & FUEL RELATED ADJUSTMENT TABLE

	Natural Gas CO_2		Natural Gas CO ppm	LP Gas CO_2		LP Gas CO ppm
	Cover On	Cover Off	Approximate, do not use for setup!	Cover On	Cover Off	Approximate, do not use for setup!
LOW FIRE	8.5%	8.3%	Less than 10	9.6%	9.4%	Less than 15
HIGH FIRE	8.8%	8.6%	Less than 110	10.0%	9.8%	Less than 120

PLEASE NOTE: All adjustments must be made with the appliance door off, which will lower the CO_2 reading 0.2%. See tables above for specific readings.

When checking or replacing a gas valve, the CO_2 percentage in the flue gas is the preferred measuring method to insure proper combustion and firing rate. CO is used as the (temporary) alternate.

Changing incoming air temperature may vary the CO_2 setting slightly (~0.2–0.6%) after initial set up. This is not cause for concern or reason to set up again. After one year of operation, set up is required again.

If your appliance will be operated in an area that has inlet air temperature variations greater than 80°F, please use the following table in adjusting your CO_2 for optimum performance.

(TABLE 3-4) CO_2 ADJUSTMENT TABLE

Inlet air ΔT variation	Setup at minimum incoming air temperature	Setup at maximum incoming air temperature
80°F	Reduce CO_2 0.2%	Increase CO_2 0.2%
100°F	Reduce CO_2 0.3%	Increase CO_2 0.3%
120°F	Reduce CO_2 0.4%	Increase CO_2 0.4%

E. SETTING THE MAXIMUM LOAD

A means of sampling the leaving flue gas is built into the vent connector on top of the appliance. Remove the rubber plug for testing and replace when testing is completed. This plug MUST be in place during normal operation.

Enter the service function (reference the Control Section for instructions) from the setup menu. After the service function is active, fan speed percentage can be set. This should be set to 100% to achieve maximum fan speed for high fire combustion setting.

If necessary, turn the adjusting slot [1], which sets the high fire performance, either counterclockwise to increase the CO2 percentage or clockwise to reduce the CO2 percentage, as shown in **Figures 3-2** and **3-3**, Part 3, Section D. Appropriate CO_2 percentages are shown in **Table 3-3** above.

NOTE: If the system is a common vented cascade, there are specific instructions related to proper combustion setting (see Part 6, Section B for details).

(TABLE 3-5) FAN SPEED REQUIREMENTS

HW 299		
Fan Type	Maximum RPM	Minimum RPM
EBM	6300	1575
Ametek	6500	1625

HW 399		
Fan Type	Maximum RPM	Minimum RPM
EBM	6200	1798
Ametek	7200	1800

HW 599		
Fan Type	Maximum RPM	Minimum RPM
EBM	5800	1624
Ametek	9500	2565

* To confirm fan type inspect fan for manufacturer label. Ametek is normally an all steel casing, EBM has a black plastic electronics enclosure

F. SETTING THE MINIMUM LOAD

Set the minimum load once the maximum load has been set, set the fan speed in the service function to the minimum RPM setting. In order to set or adjust the minimum load, turn the screw [2] for the minimum setting (first remove the protective cap). Turn the screw clockwise to increase or counter clockwise to decrease the CO2 percentage. On the HW 599, you only are allowed to set the gas valve at the right side; the left gas valve is set by the manufacturer. See Section H for special instructions on replacing both gas valves in a model 599.

- If the measuring process takes more than 40 minutes, the appliance will return to the automatic mode. If so required, enter the Service function another time.
- When you are done setting the valve, press stop in the Service function to return to normal run mode

Please do not forget to replace the protective cap on the gas valve!

G. GAS CONVERSION

If the appliance is to be converted in the field for using Propane (LPG), the following steps must be taken:

- Turn screw [1] clockwise (Figure **3-2**, Part 3, Section D) ¾ of one turn (270°) on models 299 and 1 full turn (360°) on model HW399
- On model HW599 (**Figure 3-3**, Part 3, Section D) turn screw on left hand valve closed (clockwise) and turn right valve 1-¾ of a full turn clockwise.
- Run the appliance. If the burner does not ignite after four starting efforts, turn the screw [1] one half turn back (180°) (counter clockwise).
- After conversion, follow the steps in Sections E and F for setting the maximum and minimum loads, using the LP gas values shown in Table **3-3**, Part 3, Section D.

H. GAS VALVE MAINTENANCE/REPLACEMENT

1) When checking or replacing a gas valve, the CO2 percentage in the flue gas is the preferred measuring method to insure proper combustion and firing rate. CO is used as the alternate.

2) Gas valve replacement for the HW 599:

The left hand gas valve (which is normally factory-set and sealed and must not be adjusted) must be set up to factory specifications before any combustion related adjustments can be performed on the right hand valve. An electronic manometer must be used, as it will be set to a scale of 0.01" WC.

The adjustment screw [1] (see Figure 3-3, Part 3, Section D) normally used for setting maximum flow rate must be turned counterclockwise until it begins to click when turned. The screw will not fall out, but will be fully retracted at this point. **This is for Natural Gas, for LP gas, close the left hand valve (clockwise) until it is closed down.**

The digital manometer must now be connected to the outlet pressure tapping [4] on the left hand valve only (marked do not adjust in Figure 3-3, Part 3, Section D), and the appliance fired. It must be placed in the service mode and held at the minimum firing rate (see previous page for actual minimum speed by model). With the appliance firing at this rate, adjust the offset (minimum firing rate) screw [2] to a pressure of "0" +/- .0.01" WC. **Be sure the manometer has been zeroed out prior to making this setting.**

Once this operation is complete, you may follow the instructions for setting the minimum and maximum firing rate as shown in Sections E and F, **for the right hand gas valve only.**

⚠ WARNING

FAILURE TO FOLLOW ALL PRECAUTIONS COULD RESULT IN FIRE, EXPLOSION OR DEATH!

PART 4. VENTING

A. APPROVED VENTING MATERIALS

ALL VENT PIPE MATERIALS AND FITTINGS MUST COMPLY WITH THE FOLLOWING:			
Item	Material	Standards for installation in:	
		United States	**Canada**
Vent pipe and fittings	AL 29-4C Stainless	ANSI/ASTM UL1738	UL1738
	PVC schedule 40*	ANSI/ASTM D1785	CPVC and PVC venting must be ULC-S636 Certified. IPEX is an approved vent manufacturer in Canada supplying vent material listed to ULC-S636.
	CPVC schedule 40	ANSI/ASTM F441	
	Polypropylene (PP)	ULC-S636	ULC-S636
Pipe cement & primer	PVC	ANSI/ASTM D2564	IPEX System 636 Cements & Primers
	CPVC	ANSI/ASTM F493	
NOTICE: DO NOT USE CELLULAR (FOAM) CORE PIPE			

Please note: Venting system may contain one or more of the above materials.

The appliance is a direct vent appliance and is listed as a Category IV condensing appliance. (The appliance Venting is rated at Zero Clearance to combustibles.)

⚠ SPECIAL VENTING SYSTEM DESIGN NOTES

THE APPLIANCE EFFICIENCY TESTING AND RATINGS ARE BASED ON A SEALED, TWO PIPE VENT SYSTEM; HOWEVER, MANY OTHER VENT CONFIGURATIONS ARE AVAILABLE AS FACTORY ENGINEERED SOLUTIONS. PLEASE CONTACT THE FACTORY IF EXCEPTIONS ARE REQUIRED FOR YOUR INSTALLATION.

⚠ DANGER

It is extremely important to follow these venting instructions carefully. Failure to do so can cause severe personal injury, death or substantial property damage.

⚠ WARNING

This vent system will operate with a positive pressure in the vent pipe. Do not connect vent connectors serving appliances by natural draft into any portion of mechanical draft systems operating under pressure.

NOTE: If set points exceed 140ºF, use of PVC is NOT recommended, even though product is approved as such. Contact the Manufacturer for further clarification.

B. VENTING THE APPLIANCE

(TABLE 4-1) VENTING SPECIFICATIONS

Model	Vent Diameter	Standard Vent Type	Optional Vent Type	Minimum Combined Vent Length	Maximum Combined Length
HW 299	4"	Plastic	Stainless	6' + (2) 90º elbows	225'
HW 399	4"	Plastic	Stainless	6' + (2) 90º elbows	180'
HW 599	5"	Stainless	Plastic - 6"*	6' + (2) 90º elbows	200'

*The use of 6" PVC will require the purchase of a special adapter from the Manufacturer.

(TABLE 4-2) EQUIVALENT FEET

Fittings or Piping	Equivalent Feet
90 degree elbow	5'
45 degree elbow	3'
Coupling	0
Air inlet elbow	6'
Exhaust coupling	1'

The inlet and exhaust pipes on the top of the cabinet should be the diameter and material indicated in the Venting Specifications Table above. It is very important that you plan the location properly to eliminate long pipe runs and excessive fittings. Inlet pipe size must not be reduced. *Do not combine the inlet air or exhaust with any other inlet or exhaust pipe including either to an additional similar appliance, unless you have purchased an engineered Common Venting System from the Manufacturer.* The joints must be properly cleaned, primed and cemented if plastic, and sealed per the manufacturer's instructions if stainless. The piping must also be properly supported as per Local and National Standard Plumbing Codes. It is important that the piping must be clean and free from burrs, debris, ragged ends and particles of PVC (if applicable).

NOTE: Cascaded system may be supplied with a factory designed and assembled common vented exhaust and intake air system, those maximum lengths are determined by factory engineers on a per project basis.

Use of common venting systems not supplied by the appliance manufacturer will void certifications and warranty.

B. VENTING THE APPLIANCE (continued)

Exhaust piping should be sloped back to the connection on the appliance, at least ¼" per foot (PP piping above 5" diameter requires ⅝" per foot) to remove additional condensate that forms within the pipe. The total combined length of pipe (intake piping plus exhaust piping added together) including elbow allowances intake and exhaust should not exceed the length shown in the vent table. The minimum combined vent length should not be less than a combined length of 6' plus two 90° elbows. Choose your vent termination locations carefully. You must also make certain that exhaust gas does not re-circulate back into the intake pipe. You must place them in an open area and follow the following guidelines:

NOTICE

The following are code restrictions for the location of the flue gas vent terminal. Compliance to these requirements doesn't insure a satisfactory installation; good common sense must also be applied. It is important to make sure that exhaust gases are not recirculated into the inlet air of the appliance. If there is any doubt, contact the factory BEFORE installing.

EXISTING COMMON VENT SYSTEMS

If an existing appliance is removed from a common venting system, the common venting system may then be too large for the proper venting of the remaining appliances connected to it. At the time of removal of an existing appliance, the following steps shall be followed with each appliance remaining connected to the common venting system placed in operation, while the other appliances remaining connected to the common venting system are not in operation.

a) Seal any unused openings in the common venting system.

b) Visually inspect the venting system for proper size and horizontal pitch and determine there is no blockage or restriction, leakage, corrosion and other deficiencies which could cause an unsafe condition.

c) Insofar as is practical, close all building doors and windows and all doors between the space in which the appliances remaining connected to the common venting system are located and other spaces of the building. Turn on clothes dryers and any appliance not connected to the common venting system. Turn on any exhaust fans, such as range hoods and bathroom exhaust, so they will operate at maximum speed. Do not operate a summer exhaust fan for an appliance installation. Close fireplace dampers.

d) Place in operation the appliance being inspected. Follow the lighting instructions. Adjust thermostat so appliance will operate continuously.

e) After it has been determined that each appliance remaining connected to the common venting system properly vents when tested as outlined above, return doors, windows, exhaust fans, fireplace dampers and any other gas-burning appliance to their previous condition of use.

f) Any improper operation of the common venting system should be corrected so the installation conforms with the National Fuel Gas Code, ANSI Z223.1/NFPA 54. When resizing any portion of the common venting system, the common venting system should be resized to approach the minimum size as determined using the appropriate tables in Appendix F in the National Fuel Gas Code, ANSI Z223.1/ NFPA 54 and or CSA B149 Installation Codes.

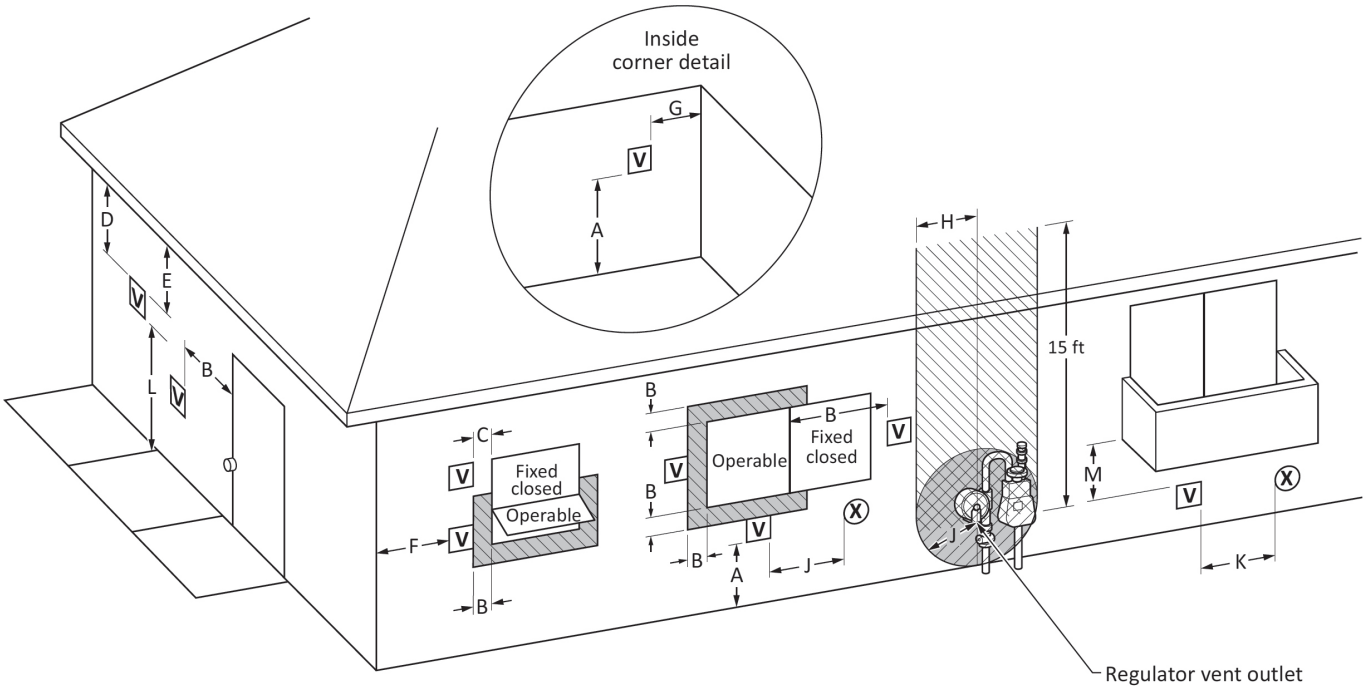

Legend:

V = Vent terminal

X = Air supply inlet

= Area where terminal is not permitted

Direct Vent Terminal Clearances

		Canadian Installations[1]	US Installations[2]
A =	Clearance above grade, veranda, porch, deck, or balcony	12 in (30 cm)	12 in (30 cm)
B =	Clearance to window or door that may be opened	6 in (15 cm) for appliances ≤ 10,000 Btuh (3 kW); 12 in (30 cm) for appliances > 10,000 Btuh (3 kW) and ≤ 100,000 Btuh (30 kW); 36 in (91 cm) for appliances > 100,000 Btuh (30 kW)	6 in (15 cm) for appliances ≤ 10,000 Btuh (3 kW); 9 in (23 cm) for appliances > 10,000 Btuh (3 kW) and ≤ 50,000 Btuh (15 kW); 12 in (30 cm) for appliances > 50,000 Btuh (15 kW)
C =	Clearance to permanently closed window	Per local installation codes	
D =	Vertical clearance to ventilated soffit located above the terminal within a horizontal distance of 2 ft (61 cm) from the center line of the terminal.		
E =	Clearance to unventilated soffit		
F =	Clearance to outside corner		
G =	Clearance to inside corner		
H =	Clearance to each side of center line extended above meter / regulator assembly	3 ft (91 cm) within a height of 15 ft (4.6m)	
I =	Clearance to service regulator vent outlet	3 ft (91 cm)	
J =	Clearance to nonmechanical air supply inlet to building or the combustion air inlet to any other appliance	6 in (15 cm) for appliances ≤ 10,000 Btuh (3kW); 12 in (30 cm) for appliances > 10,000 Btuh (3 kW) and ≤ 100,000 Btuh (30 kW); 36 in (91 cm) for appliances > 100,000 Btuh (30 kW)	6 in (15 cm) for appliances ≤ 10,000 Btuh (3kW); 9 in (23 cm) for appliances > 10,000 Btuh (3 kW) and ≤ 50,000 Btuh (15 kW); 12 in (30 cm) for appliances > 50,000 Btuh (15 kW)

Direct Vent Terminal Clearances (continued)

K =	Clearance to a mechanical air supply inlet	6 ft (1.83 m)	3 ft (91 cm) above if within 10 ft (3 m) horizontally
L =	Clearance above paved sidewalk or paved driveway located on public property	7 ft (2.13 m)†	Vents for Category II and IV appliances cannot be located above public walkways or other areas where condensate or vapor can cause a nuisance or hazard
M =	Clearance under veranda, porch, deck, or balcony	12 in (30 cm)‡	Per local installation codes

† A vent shall not terminate directly above a sidewalk or paved driveway that is located between two single family dwellings and serves both dwellings.

‡ Permitted only if veranda, porch, deck, or balcony is fully open on a minimum of two sides beneath the floor.

NOTES:

1) In accordance with the current CSA B149.1, Natural Gas and Propane Installation Code
2) In accordance with the current ANSI Z223.1/NFPA 54, National Fuel Gas Code
3) If locally adopted installation codes specify clearances different than those illustrated, then the most stringent clearances must prevail.

Other Than Direct Vent Terminal Clearances

		Canadian Installations[1]	US Installations[2]
A =	Clearance above grade, veranda, porch, deck, or balcony	12 in (30 cm)	12 in (30 cm)
B =	Clearance to window or door that may be opened	6 in (15 cm) for appliances ≤ 10,000 Btuh (3 kW); 12 in (30 cm) for appliances > 10,000 Btuh (3 kW) and ≤ 100,000 Btuh (30 kW); 36 in (91 cm) for appliances > 100,000 Btuh (30 kW)	4 ft (1.2 m) below or to side of opening; 1 ft (300 mm) above opening
C =	Clearance to permanently closed window	Per local installation codes	
D =	Vertical clearance to ventilated soffit located above the terminal within a horizontal distance of 2 ft (61 cm) from the center line of the terminal		
E =	Clearance to unventilated soffit		
F =	Clearance to outside corner		
G =	Clearance to inside corner		
H =	Clearance to each side of center line extended above meter/regulator assembly	3 ft (91 cm) within a height of 15 ft (4.6m)	
I =	Clearance to service regulator vent outlet	3 ft (91 cm)	
J =	Clearance to nonmechanical air supply inlet to building or the combustion air inlet to any other appliance	6 in (15 cm) for appliances ≤ 10,000 Btuh (3kW); 12 in (30 cm) for appliances > 10,000 Btuh (3 kW) and ≤ 100,000 Btuh (30 kW); 36 in (91 cm) for appliances > 100,000 Btuh (30 kW)	4 ft (1.2 m) below or to side of opening; 1 ft (300 mm) above opening

Other Than Direct Vent Terminal Clearances (continued)

K =	Clearance to a mechanical air supply inlet	6 ft (1.83 m)	3 ft (91 cm) above if within 10 ft (3 m) horizontally
L =	Clearance above paved sidewalk or paved driveway located on public property	7 ft (2.13 m)†	Vents for Category II and IV appliances cannot be located above public walkways or other areas where condensate or vapor can cause a nuisance or hazard
M =	Clearance under veranda, porch, deck, or balcony	12 in (30 cm)‡	Per local installation codes

† A vent shall not terminate directly above a sidewalk or paved driveway that is located between two single family dwellings and serves both dwellings.

‡ Permitted only if veranda, porch, deck, or balcony is fully open on a minimum of two sides beneath the floor.

NOTES:

1) In accordance with the current CSA B149.1, Natural Gas and Propane Installation Code
2) In accordance with the current ANSI Z223.1/NFPA 54, National Fuel Gas Code
3) If locally adopted installation codes specify clearances different than those illustrated, then the most stringent clearances must prevail.

B. VENTING THE APPLIANCE (continued)

(FIGURE 4-2) SIDEWALL VENT WITH DOWN ELBOW (INTAKE) & UP ELBOW (EXHAUST)

PLEASE NOTE:
Exhaust must not terminate beneath an overhang!

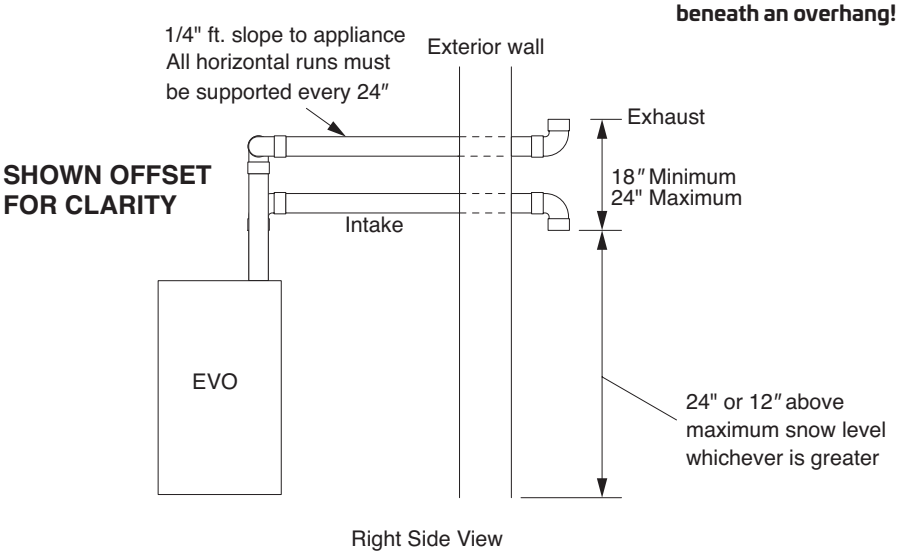

VENTING FOR MULTIPLE UNITS, with vents all on same horizontal plane, spaced at least 8 inches apart, and at level of highest unit.

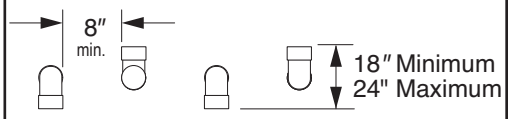

Front Elevation

- OR -

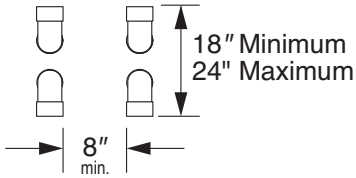

Front Elevation
(Multiple Vents)

****IMPORTANT NOTE:** All vent pipes must be glued, properly supported and the exhaust must be pitched a minimum of a 1/4" per foot back to the appliance (to allow drainage of condensate). All stainless venting must be sealed at each joint per manufacturer's instructions.

(FIGURE 4-3) VERTICAL VENT WITH DOUBLE ELBOW (INTAKE) & COUPLING (EXHAUST)

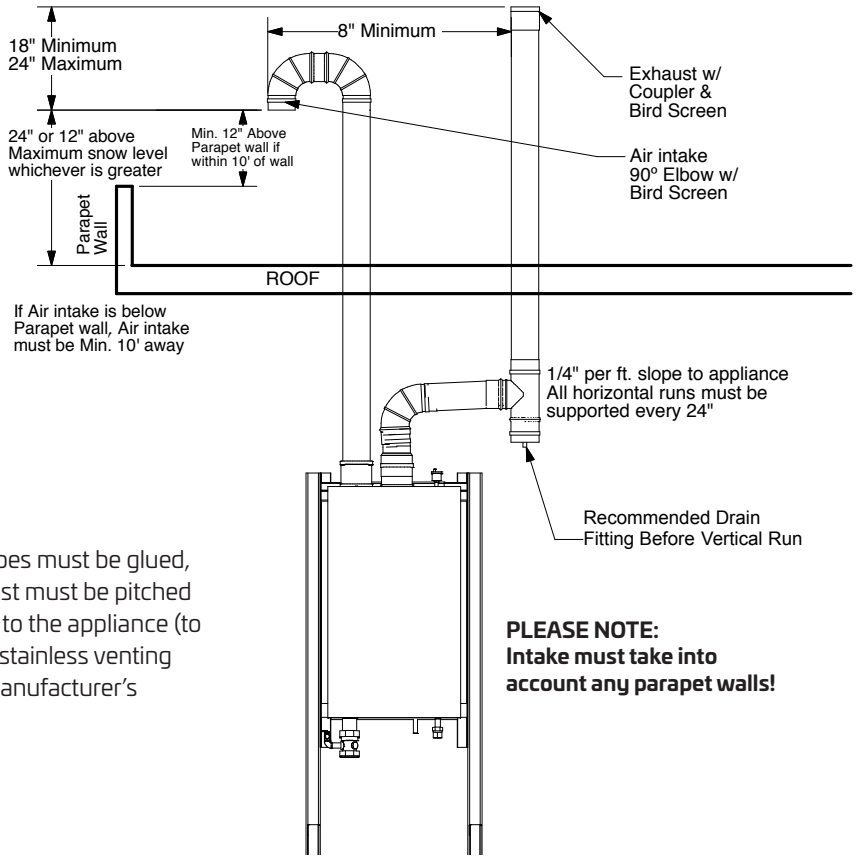

PLEASE NOTE:
Intake must take into account any parapet walls!

****IMPORTANT NOTE:** All vent pipes must be glued, properly supported and the exhaust must be pitched a minimum of a 1/4" per foot back to the appliance (to allow drainage of condensate). All stainless venting must be sealed at each joint per manufacturer's instructions.

(FIGURE 4-4) VERTICAL VENT WITH PVC/CPVC

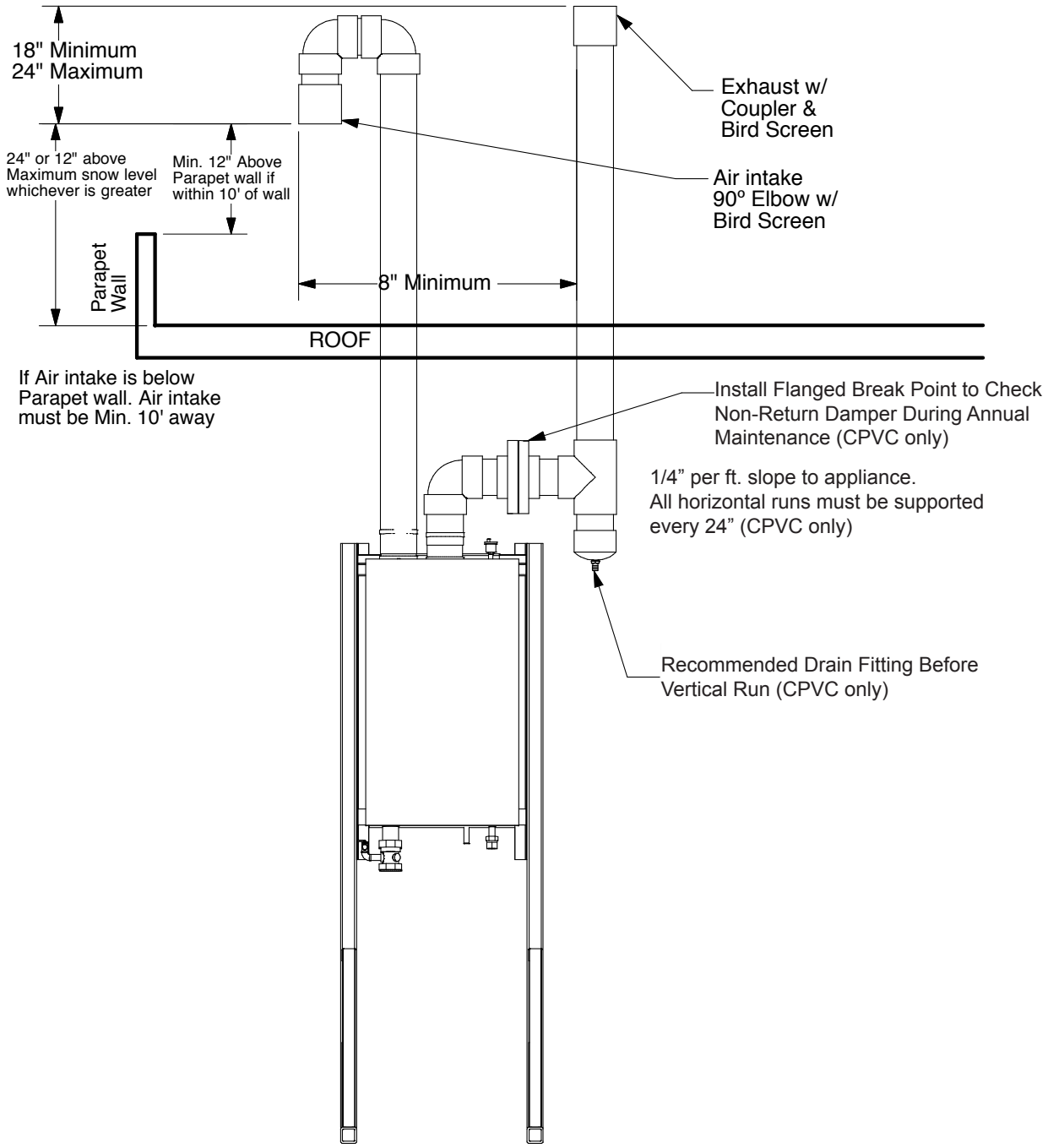

B. VENTING THE APPLIANCE (continued)

DIAGRAMS FOR ROOM AIR VENTING TERMINATION

If you're using room air, your unit should be set up this way:

⚠ CAUTION

Flue Gas will condense as it exits the vent termination. This condensate can freeze on exterior building surfaces which may cause discoloration of these surfaces. Consideration should be given to the plume of condensation that exits the exhaust which may affect the cosmetic appearance of the building.

(FIGURE 4-5) VERTICAL TERMINATION

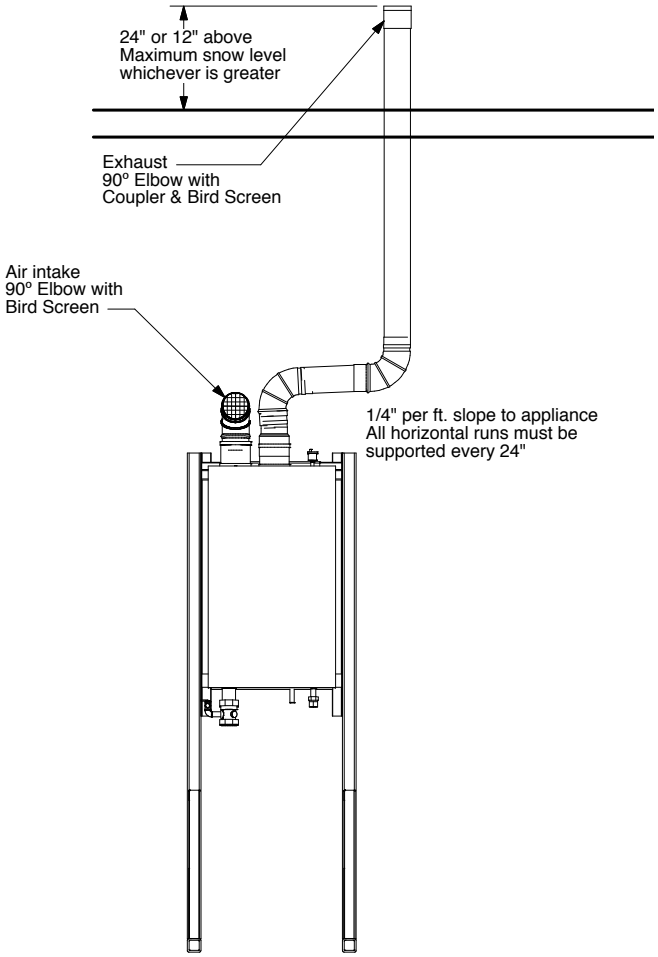

(FIGURE 4-6) SIDEWALL TERMINATION

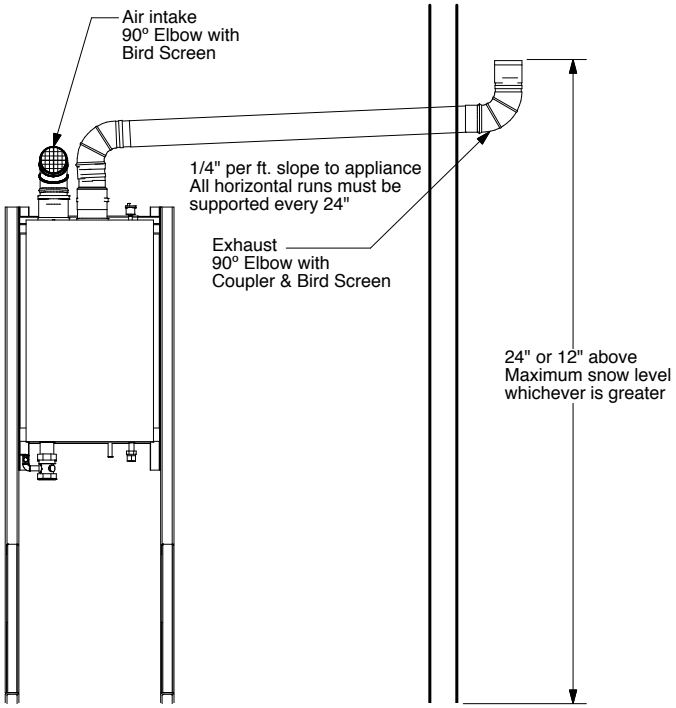

As long as the boiler room remains under a positive pressure under all operating conditions of the building, this is a perfectly acceptable option. Generally, all this requires is an external free air source; typically just two properly sized openings to the outdoors. Installations done in this manner must comply with ANSI Z223.1, NFPA 54—National Fuel Gas Code 2009 section 9.3, and any specific local codes that may require additional combustion air be provided. For the latest edition, see *Technical Bulletin–TB 003.* This would be our preferred alternate to our standard manual specifications.

NOTE: Stated efficiencies are based on ducted air; using room air may effect efficiency.

C. INLET AIR VENT

You may use the same material as used for exhaust or any material that is the same diameter that provides a pressure tight connection. THIS IS ONLY FOR INLET AIR, NOT FOR EXHAUST PIPING!

The air inlet must be a minimum of 12" vertically above the maximum snow level. It is very important that there are no other vents, chimneys or air inlets in any direction for at least 48".

All venting must be properly supported. The appliance is not intended to support any venting whatsoever. All piping, glue, solvents, cleaners, fittings and components, must conform to ASTM (American Society for Testing and Materials), and ANSI (American National Standards Institute).

D. VENTING RUNS THAT EXCEED MAXIMUM COMBINED LENGTH

If the combined venting length of an appliance's exhaust/inlet air system exceeds the Maximum Combined Length called out in Part 4, Section A, contact the manufacturer for an engineered venting calculation. Do not proceed without calling the Manufacturer.

VENT CALCULATION EXAMPLE: Installation requires the following material for both inlet and exhaust piping for the HW 299 (maximum combined equivalent length is 225 feet).

Required: 6 Pcs. 90° elbow (6 x 5 = 30 equivalent feet)	= 30 equivalent feet
Required: 20' of Plastic PVC Pipe (20 x 1 = 20 equivalent feet)	= 20 equivalent feet
Required: Inlet air in vertical termination (2) 90° elbows + bird screen)	= 11 equivalent feet
Required: Exhaust coupling	= 1 equivalent foot
Total Friction Loss in equivalent feet	**= 62 equivalent feet**

THIS VENT SYSTEM IS OK!

⚠ DANGER

The appliance is not intended to be common vented with any other existing appliance! Multiple appliance products may be common vented, only if using an engineered system by the Manufacturer.

E. CONDENSATE REQUIREMENTS

This is a condensing high efficiency appliance, therefore this unit has a condensate removal system. Condensate is nothing more than water vapor derived from the combustion products, similar to an automobile when it is initially started. This condensate does have a low pH and should be treated with a Condensate Neutralizer Filter. This filter contains either lime or marble rocks, which will neutralize the condensate. The outlet of the filter is sized for 1.5" PVC pipe. ***It is very important that the condensate line is sloped away from and down to a suitable inside drain.*** A condensate neutralizer and a condensate pump kit are available from the Manufacturer. It is also very important that the condensate line is not exposed to freezing temperatures, or any other type of blockage. Plastic tubing or PVC pipe should be the only materials used for the condensate line. Steel, brass, copper or others will be subject to corrosion and deterioration. A second vent may be necessary to prevent condensate line vacuum lock if a long horizontal run is used. The appliance has an automatic safety device that will shut it down in the event of a condensate drain blockage. Please test annually.

Maximum volume of condensate produced is 11 gallons per hour per 1,000,000 BTU of gas burned.

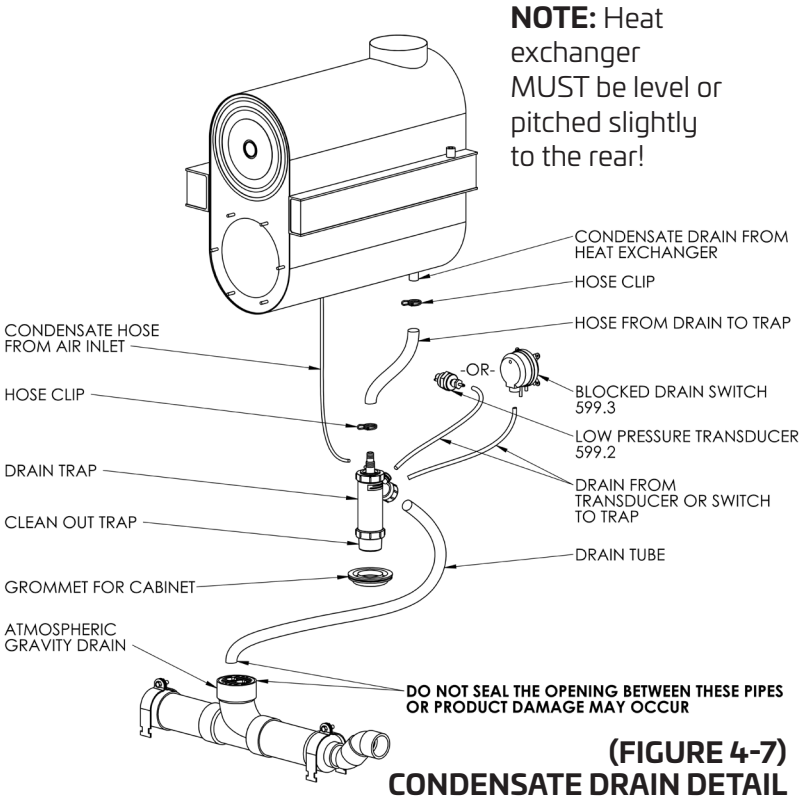

(FIGURE 4-7)
CONDENSATE DRAIN DETAIL

⚠ WARNING

In a common vent system, DO NOT POWER THE UNIT OFF! Equipment damage may occur. To disable operation, turn off gas, NOT power. If you have any questions, please call Technical Support.

PART 5. PIPING

A. HYDRONIC HEATING BOILER PIPING

The appliance is designed to function in a closed loop (minimum) 12 PSI System. Never let the appliance operate without a minimum of 10 PSI water pressure, this assures that the heat exchanger can be completely purged of air, failure to do so could cause damage. It is important to note that the appliance is flow dependent for proper efficiency and life expectancy; therefore, primary-secondary piping or use of a low loss header design is always recommended, as shown in the Figure 5-1 below. Each appliance should have an Air Eliminator, in addition to the heat exchanger mounted air vent, which will remove air from the Hydronic System. Always follow good piping practices. Observe minimum 1" clearance to combustibles around all uninsulated hot water pipes, or when openings around pipes are not protected by non-combustible materials. On an appliance installed above the level of the highest heat transfer device, some state and local codes require a low water cut off device at the time of installation by the installer. A water flow switch is provided as standard and will take the place of a low water cut-off. If the appliance supplies hot water to heating coils in air handler units, flow control valves or other devices must be installed to prevent gravity circulation of boiler water in the coils during the cooling cycle.

Basic piping connection steps are listed below. A drawing, specific to your application can be obtained from your distributor or the Manufacturer, which will guide you through proper installation of the appliance.

1) Pipe properly, in accordance with generally accepted piping principals or the Manufacturers specific documents.

2) Connect system return to the pipe entering the appliance closest to the back. Use factory supplied gaskets. DO NOT over tighten. Hand tighten over through nut and then an additional ¼ turn.

3) Connect system supply to the pipe leaving the appliance containing the Relief Valve.

4) Install Drain Valve on system supply.

NOTE: The appliance cannot be drained of water without purging the unit with air pressure, 15 PSI minimum. The system's air vent must be closed during this process.

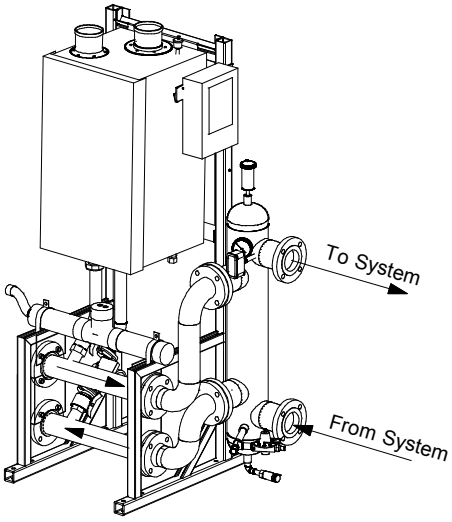

(FIGURE 5-1) BOILER PIPING

(TABLE 5-1) BOILER PIPING

Model	Boiler Only GPM ΔP	Design ΔT		Minimum Manifold Pipe Sizes			
				Single	Double	Triple	Quad
HW 299	11 @ 9.3'	51.8º F	28.8º C	1.5"	1.5"	2"	2"
HW 399	17.6 @ 8.5'	43.2º F	24.0º C	1.5"	2"	2"	2.5"
HW 599	26.4 @ 9.4'	45.3º F	25.2º C	1.5"	2"	2.5"	3"

Note: Flow rates shown above are for clean, closed loop systems, if there is any doubt about system cleanliness proper precautions should be taken, and the flow rates for appliances as shown in Table 5-2 should be utilized.

B. BOILER SCHEMATIC DRAWINGS

TWO BOILER SCHEMATIC TO SYSTEM SEPARATOR

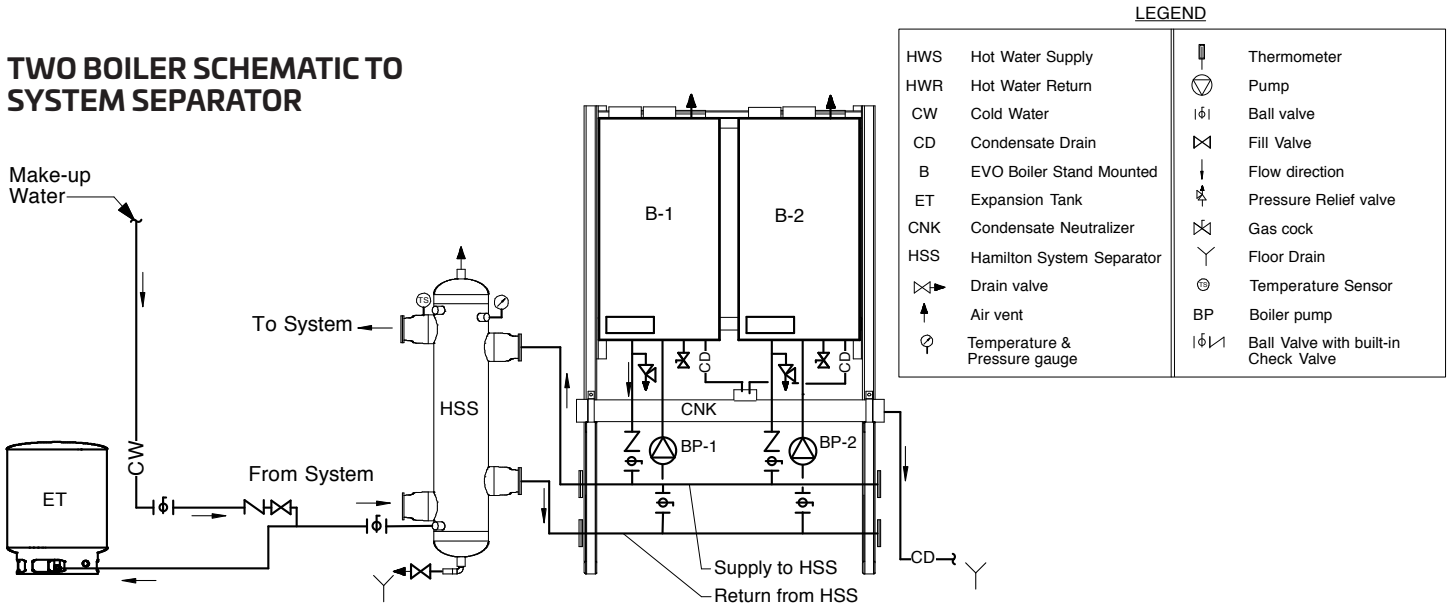

THREE BOILER SCHEMATIC TO SYSTEM SEPARATOR WITH ONE ZONE FOR INDIRECT HOT WATER TANK, SYSTEM MAY ALSO BE DESIGNED WITH EXTERNAL HEAT EXCHANGER

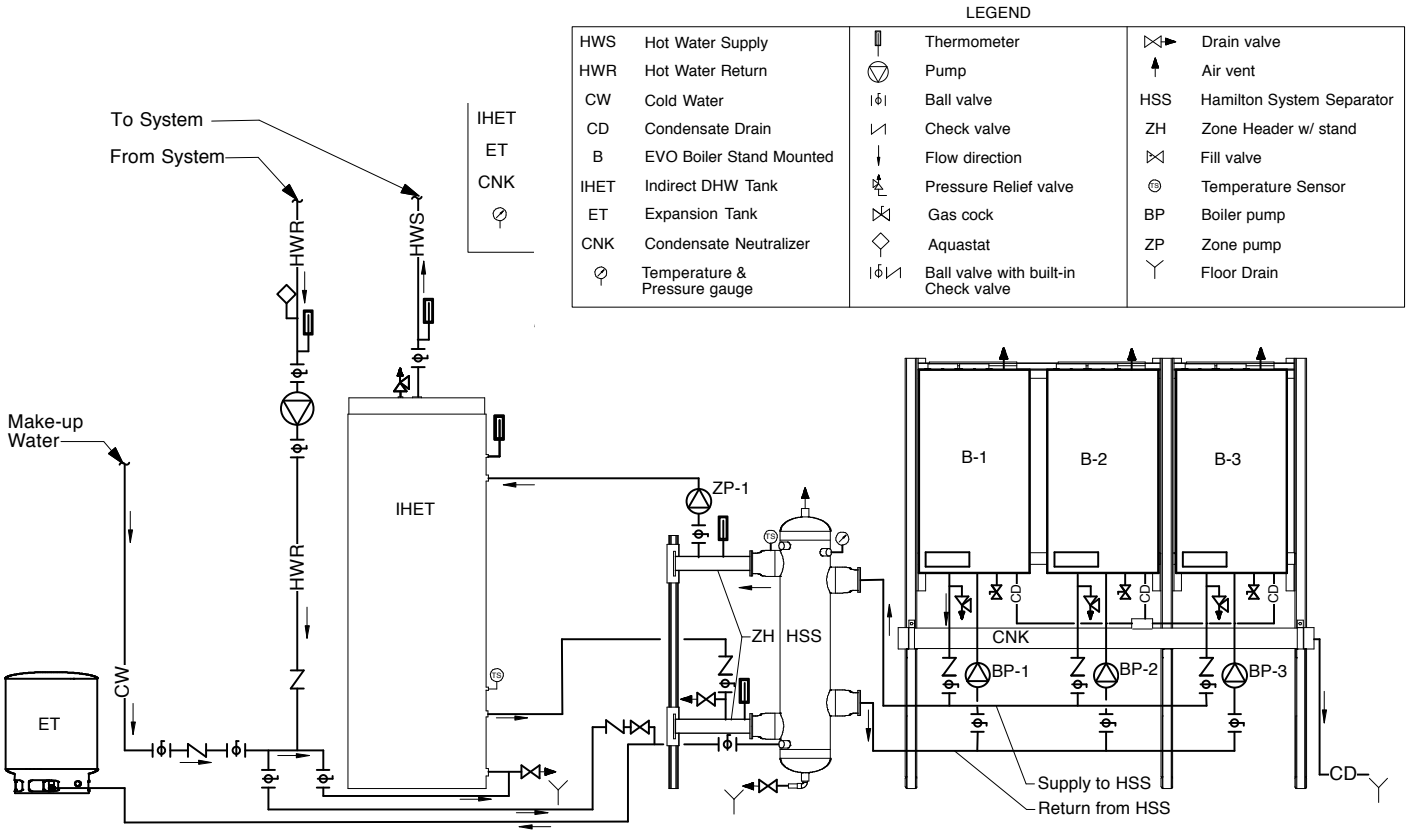

IMPORTANT NOTE: The above are representative drawings; must conform to local codes. Consult factory for Custom System Solutions.

C. FILL & PURGE HEATING (HYDRONIC) SYSTEM

1) Attach hose to balance and purge hose connector and run to drain.
2) Close the other side of the balance and purge valve.
3) Open first zone balance and purge valve, so as to let the water flow out of the hose. If zone valves are used, open zone valves one at a time, manually. (NOTE: please check manufacturer's instructions prior to opening valves manually, so as not to damage the valve.)
4) Manually operate fill valve regulator. When water runs out of hose, connected to the balance and purge valve, in steady stream (with no air bubbles), close balance and purge valve to stop the water from flowing. Disconnect hose and connect to next zone to be purged.
5) Repeat procedure for additional zones (one at a time).

Upon completion, make sure that the fill valve is in automatic position and each zone balance and purge valve is in the open position and zone valves are positioned for automatic operation.

NOTE: Installations that incorporate Standing Iron Radiators and systems with manual high point vents:

Follow the above procedure, then starting with nearest manual air vent, open vent until water flows out; close vent. Repeat procedure, working your way toward furthest air vent. It may be necessary to install a basket strainer or filtration in an older hydronic system where larger amounts of sediment may be present. Periodic cleaning of the strainer may be necessary.

For appliance water and/or odd water systems, please make note of these additional guidelines:

- **Thoroughly flush the system (without appliance connected) to remove sediment. The high-efficiency heat exchanger can be damaged by build-up or corrosion due to sediment.**
- **Do not use petroleum-based cleaning or sealing compounds in the appliance system. Gaskets and seals in the system may be damaged. This can result in substantial property damage.**
- **Do not use 'homemade cures' or 'boiler patent medicines'. Serious damage to the appliance, personnel, and/or property may result.**
- **Continual fresh make-up water will reduce appliance life. Mineral buildup in the heat exchanger reduces heat transfer, overheats the stainless steel heat exchanger, and causes failure. Addition of oxygen carried in by makeup water can cause internal corrosion in system components. Leaks in appliance or piping must be repaired at once to prevent makeup water.**

D. REMOVING AIR FROM THE HEAT EXCHANGER

The 299–599 has an automatic air vent on the top of the appliance and the air vent cap must be loosened to allow trapped air to escape when the appliance is initially filled and put into operation. If this air vent should start to leak, there are two possible solutions:

a. Close the cap—the air vent is not needed anymore after the heat exchanger has been purged of air. This air vent MUST be operable if the appliance is drained and refilled.

b Replace the air vent. When replacing the air vent, the water must be shut off and pressure released first.

E. WATER HEATING PIPING

1 Use only the pipe sizes shown and a pump meeting the listed specifications in the following tables:
***NOTE:** Individual Appliance Piping pressure drop used in the tables is based on 20 feet of straight pipe, 6 elbows, 2 tees, 2 full port ball valves and 2 unions.

2) The city cold water supply to the water heating system should be connected between the appliance outlet and the storage tank or the storage tank directly. This will help minimize unnecessary short cycling due to small hot water draws. Higher efficiency can be obtained through use of our optional CWIS™—Cold Water Injection System in any Hamilton Storage Tank.

3) Isolation valves should be installed on each appliance and on the cold and hot water system connections.

Upon completion of piping, fill and properly purge of all air. Open all valves and start circulating pump. Consult the Manufacturer for specific piping diagrams for your application.

NOTE: Minimum pump selection is based on piping sizes shown below and water hardness not to exceed 12 grains per gallon and total maximum equivalent piping length of 60 feet.

(FIGURE 5-2) HEATER PIPING

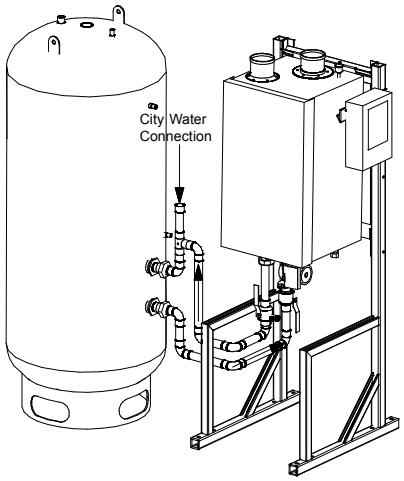

(TABLE 5-2) WATER HEATER PIPING

Model	GPM ΔP*	Design ΔT		Minimum Manifold Pipe Size			
				Single	Double	Triple	Quad
HW 299	16.5 @ 22.9′	35.3º F	19.6º C	1.5″	2″	2″	2.5″
HW 399	26.4 @ 20.3′	29.4º F	16.3º C	2″	2″	2.5″	3″
HW 599	39.6 @ 23.6′	30.9º F	17.1º C	2″	2.5″	3″	4″

*Water heater and piping as described above.

F. WATER HEATING SCHEMATIC DRAWINGS

One water heater schematic to single tank

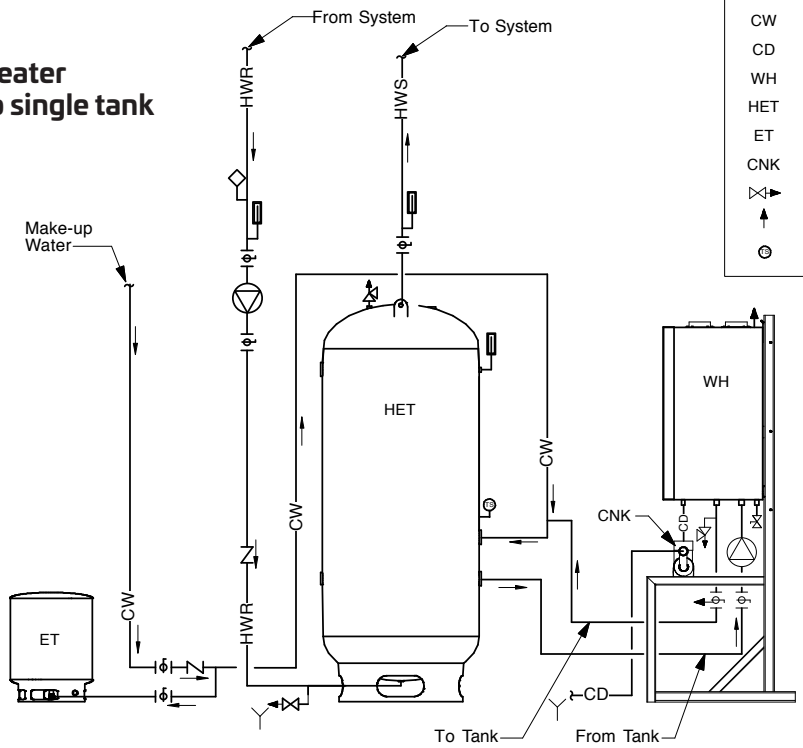

LEGEND

HWS	Hot Water Supply		Thermometer
HWR	Hot Water Return		Pump
CW	Cold Water		Ball valve
CD	Condensate Drain		Check valve
WH	Water Heater with Stand		Aquastat
HET	Storage Tank		Flow direction
ET	Expansion Tank		Pressure Relief valve
CNK	Condensate Neutralizer		Ball Valve with built-in Drain Valve
	Drain valve		
	Air vent		Gas cock
	Temperature Sensor		Floor drain

One water heater schematic to single tank with mixing valves

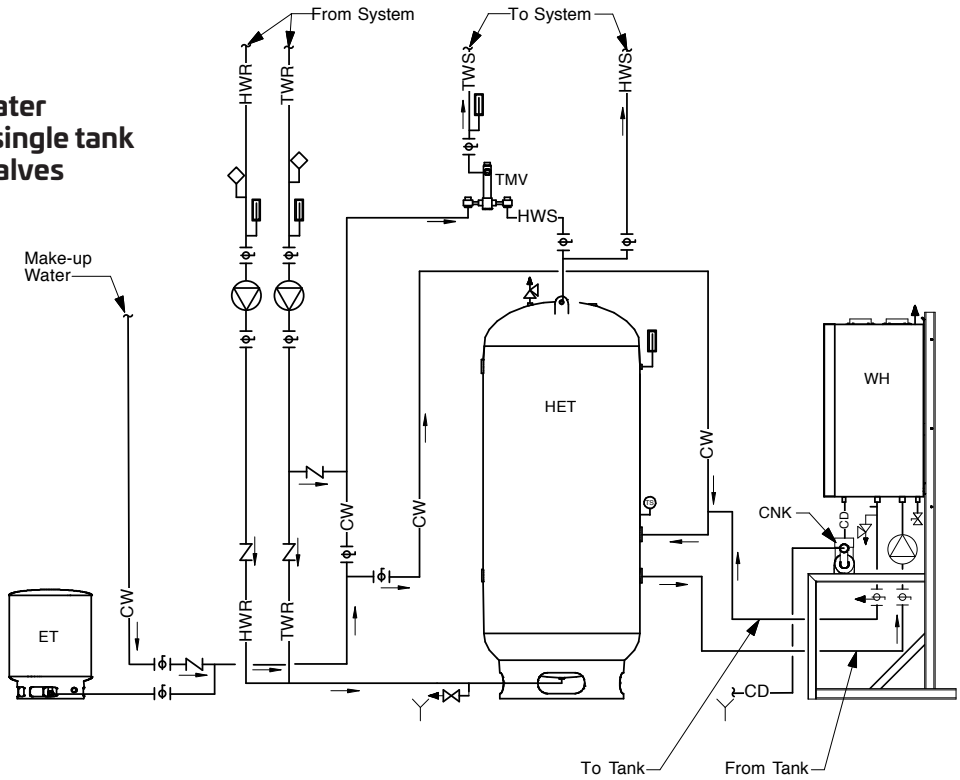

LEGEND

HWS	Hot Water Supply
HWR	Hot Water Return
CW	Cold Water
TWS	Tempered Water Supply
TWR	Tempered Water Return
CD	Condensate Drain
WH	Water Heater with Stand
HET	Storage Tank
ET	Expansion Tank
CNK	Condensate Neutralizer
TMV	Termostatic Mixing Valve
	Thermometer
	Pump
	Ball valve
	Check valve
	Aquastat
	Flow direction
	Pressure Relief valve
	Ball Valve with built-in Drain Valve
	Gas cock
	Drain valve
	Air vent
	Temperature Sensor
	Floor drain

IMPORTANT NOTE: The above are representative drawings; must conform to local codes. Consult factory for Custom System Solutions.

F. WATER HEATING SCHEMATIC DRAWINGS (continued)

One water heater schematic to single tank with mixing valve and CWIS™

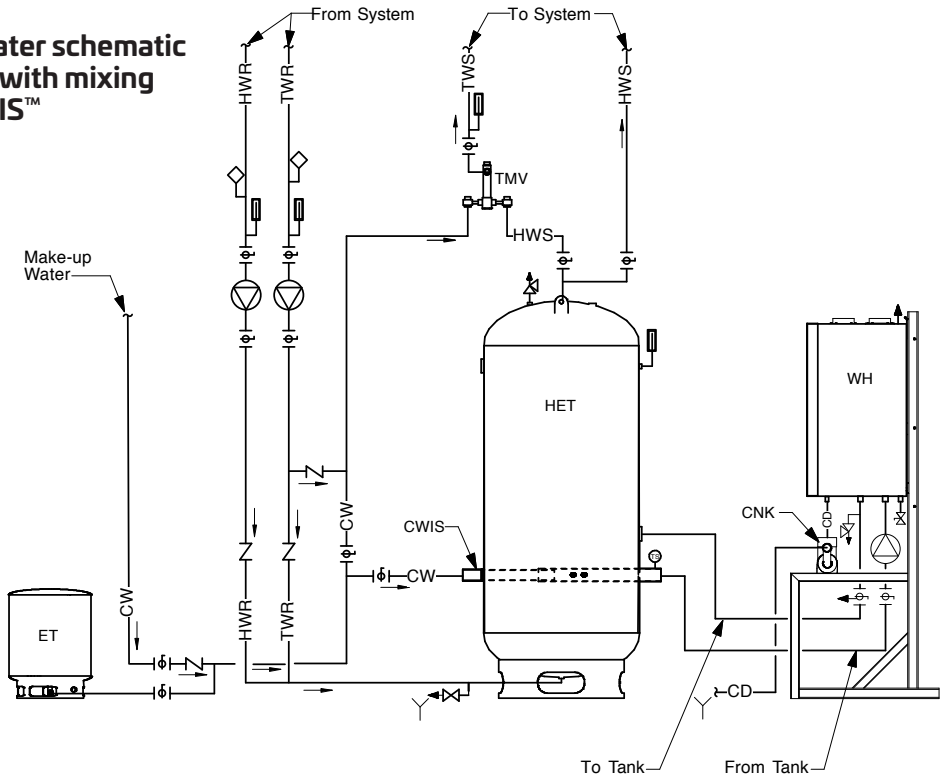

LEGEND

HWS	Hot Water Supply
HWR	Hot Water Return
CW	Cold Water
TWS	Tempered Water Supply
TWR	Tempered Water Return
CD	Condensate Drain
WH	Water Heater with Stand
HET	Storage Tank
ET	Expansion Tank
CNK	Condensate Neutralizer
TMV	Termostatic Mixing Valve
	Thermometer
	Pump
	Ball valve
	Check valve
	Aquastat
	Flow direction
	Pressure Relief valve
	Ball Valve with built-in Drain Valve
	Gas cock
	Drain valve
	Air vent
	Temperature Sensor
	Floor drain
CWIS	Cold Water Injection System

Three water heater schematic to single tank

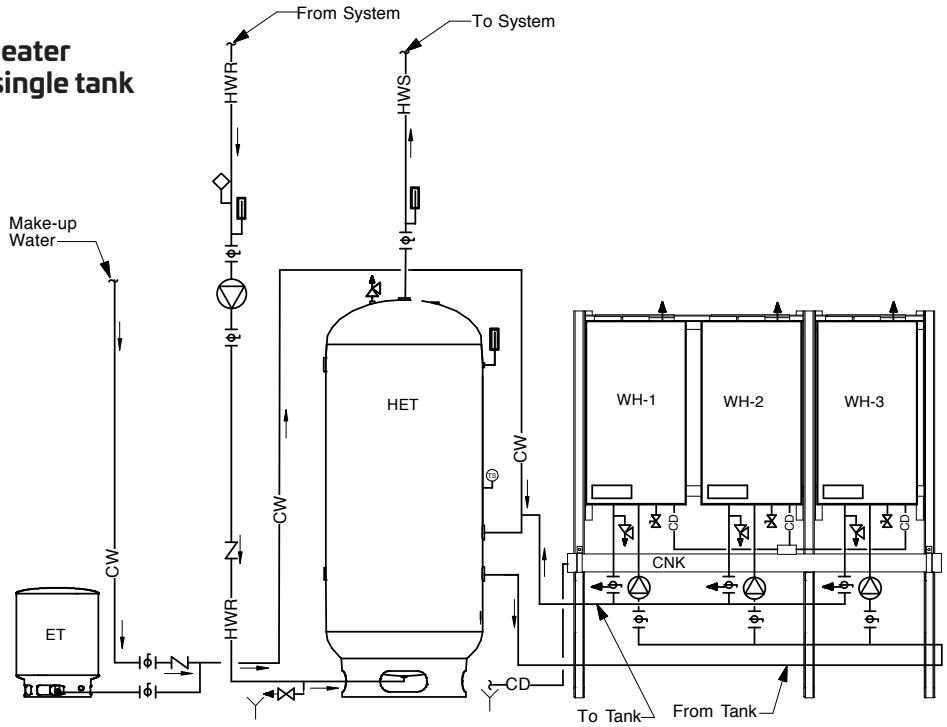

LEGEND

HWS	Hot Water Supply
HWR	Hot Water Return
CW	Cold Water
CD	Condensate Drain
WH	Water Heater with Stand
HET	Storage Tank
ET	Expansion Tank
CNK	Condensate Neutralizer
	Thermometer
	Pump
	Ball valve
	Check valve
	Aquastat
	Flow direction
	Pressure Relief valve
	Ball Valve with built-in Drain Valve
	Gas cock
	Drain valve
	Air vent
	Temperature Sensor
	Floor drain

IMPORTANT NOTE: The above are representative drawings; must conform to local codes. Consult factory for Custom System Solutions.

Three water heater schematic to single tank

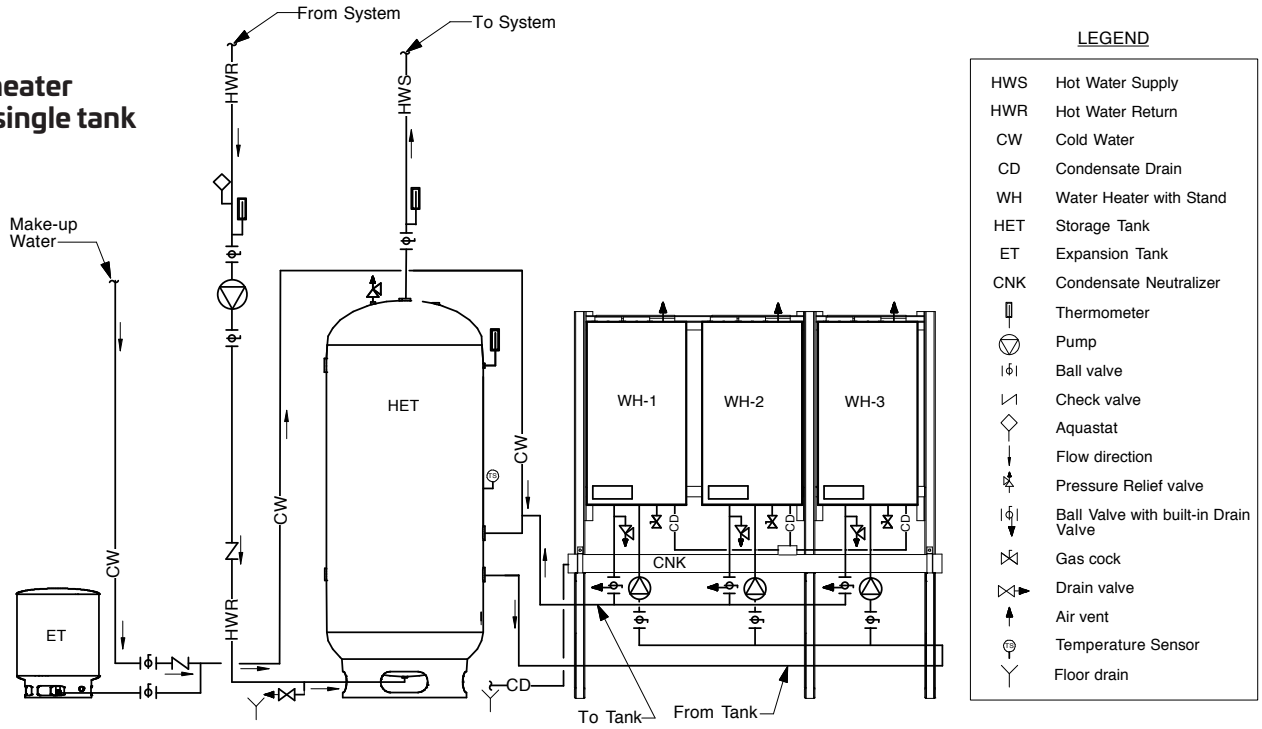

Three water heater schematic to single tank with mixing valve

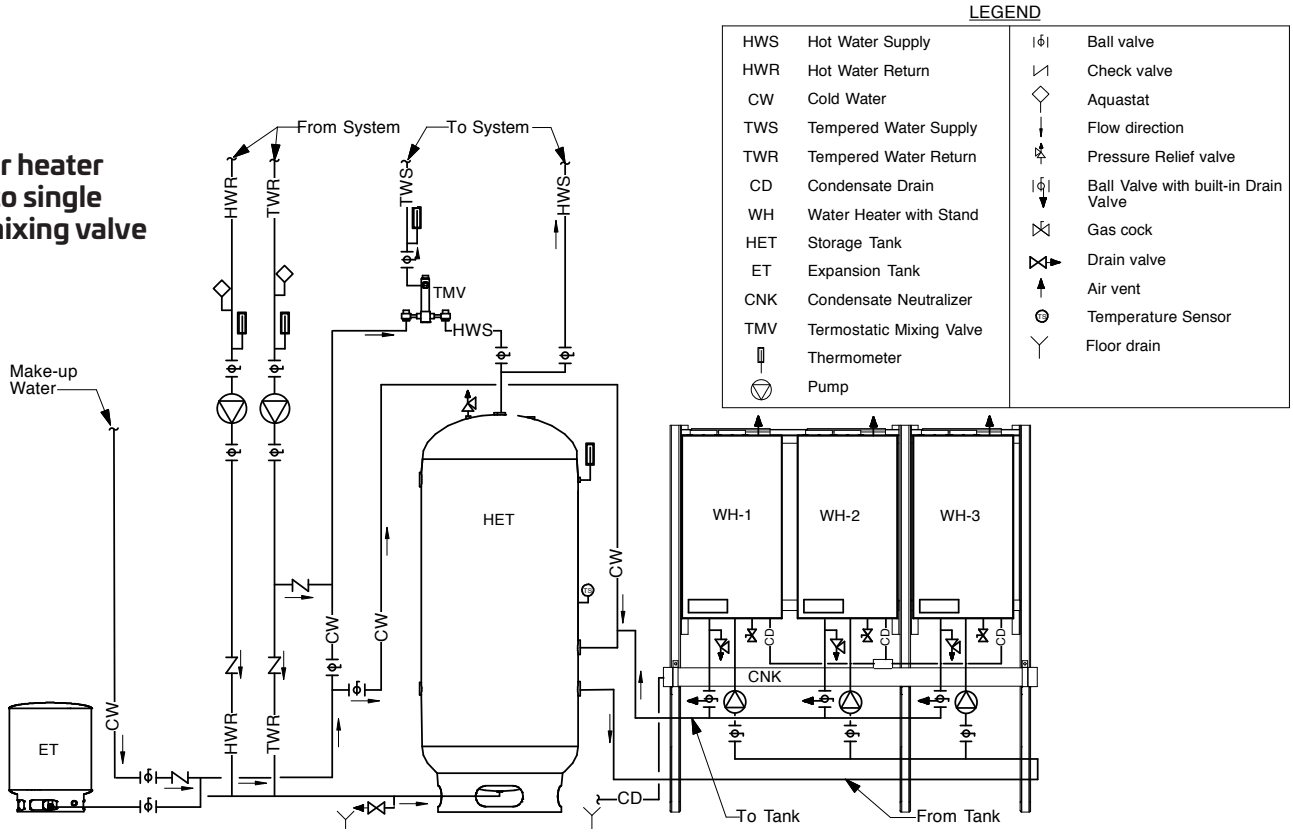

IMPORTANT NOTE: The above are representative drawings; must conform to local codes. Consult factory for Custom System Solutions.

F. WATER HEATING SCHEMATIC DRAWINGS (continued)

Three water heater schematic to single tank with mixing valve AND CWIS™

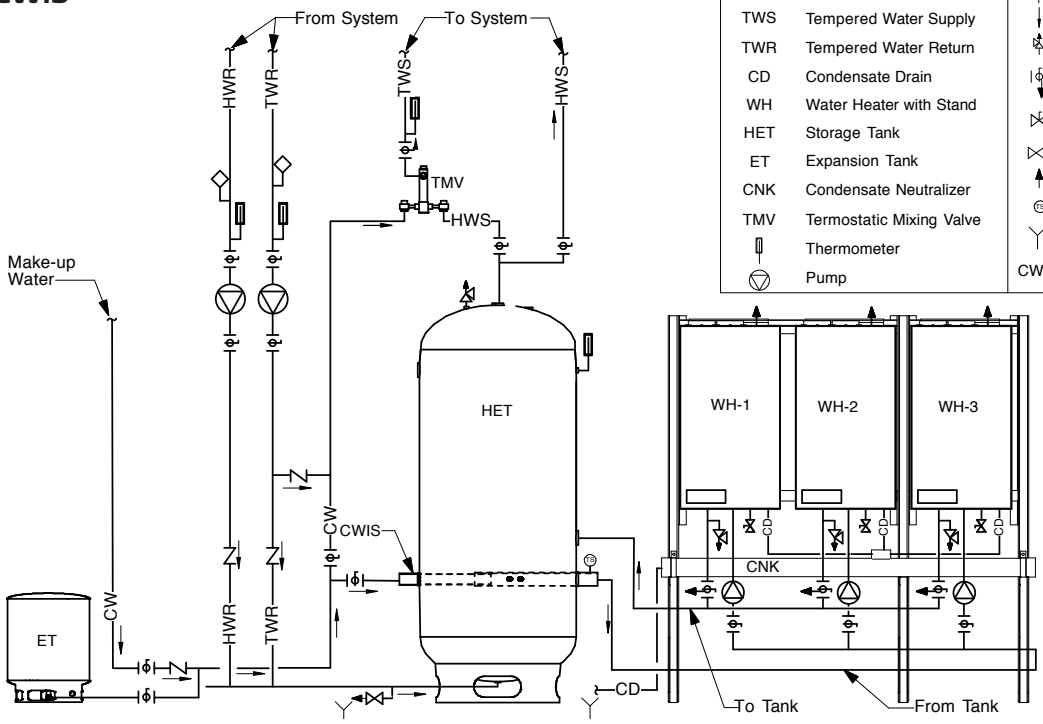

LEGEND

HWS	Hot Water Supply		Ball valve
HWR	Hot Water Return		Check valve
CW	Cold Water		Aquastat
TWS	Tempered Water Supply		Flow direction
TWR	Tempered Water Return		Pressure Relief valve
CD	Condensate Drain		Ball Valve with built-in Drain Valve
WH	Water Heater with Stand		Gas cock
HET	Storage Tank		Drain valve
ET	Expansion Tank		Air vent
CNK	Condensate Neutralizer		Temperature Sensor
TMV	Termostatic Mixing Valve		Floor drain
	Thermometer	CWIS	Cold Water Injection System
	Pump		

Three water heater schematic to single tank with CWIS™

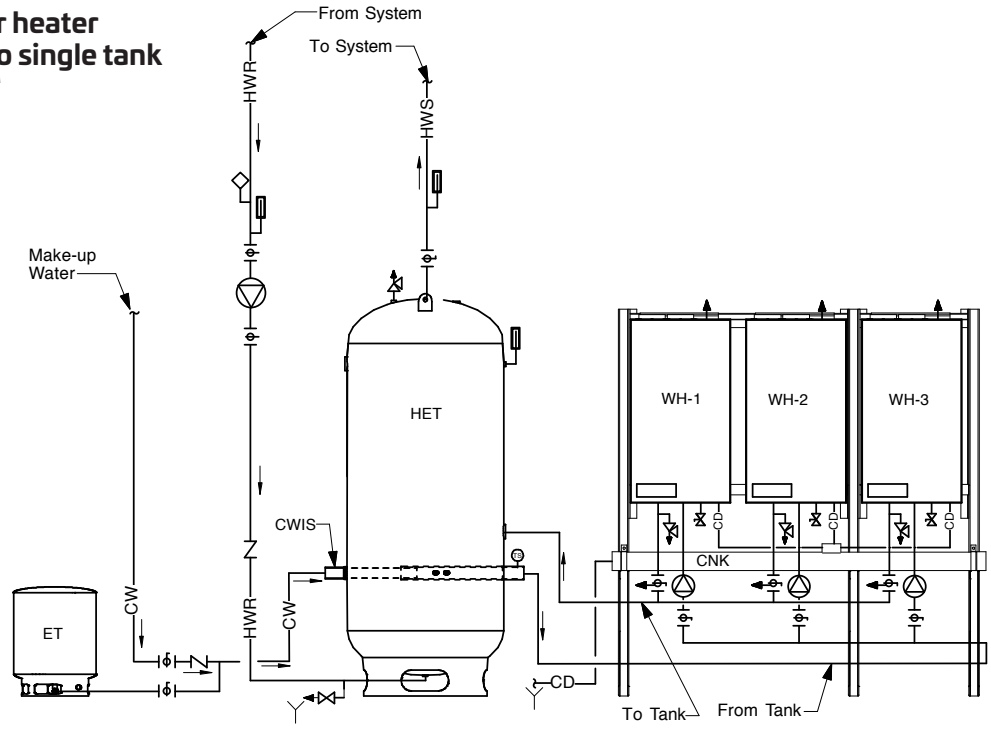

LEGEND

HWS	Hot Water Supply
HWR	Hot Water Return
CW	Cold Water
CD	Condensate Drain
WH	Water Heater with Stand
HET	Storage Tank
ET	Expansion Tank
CNK	Condensate Neutralizer
	Thermometer
	Pump
	Ball valve
	Check valve
	Aquastat
	Flow direction
	Pressure Relief valve
	Ball Valve with built-in Drain Valve
	Gas cock
	Drain valve
	Air vent
	Temperature Sensor
	Floor drain
CWIS	Cold Water Injection System

IMPORTANT NOTE: The above are representative drawings; must conform to local codes. Consult factory for Custom System Solutions.

Three water heater schematic to two tanks

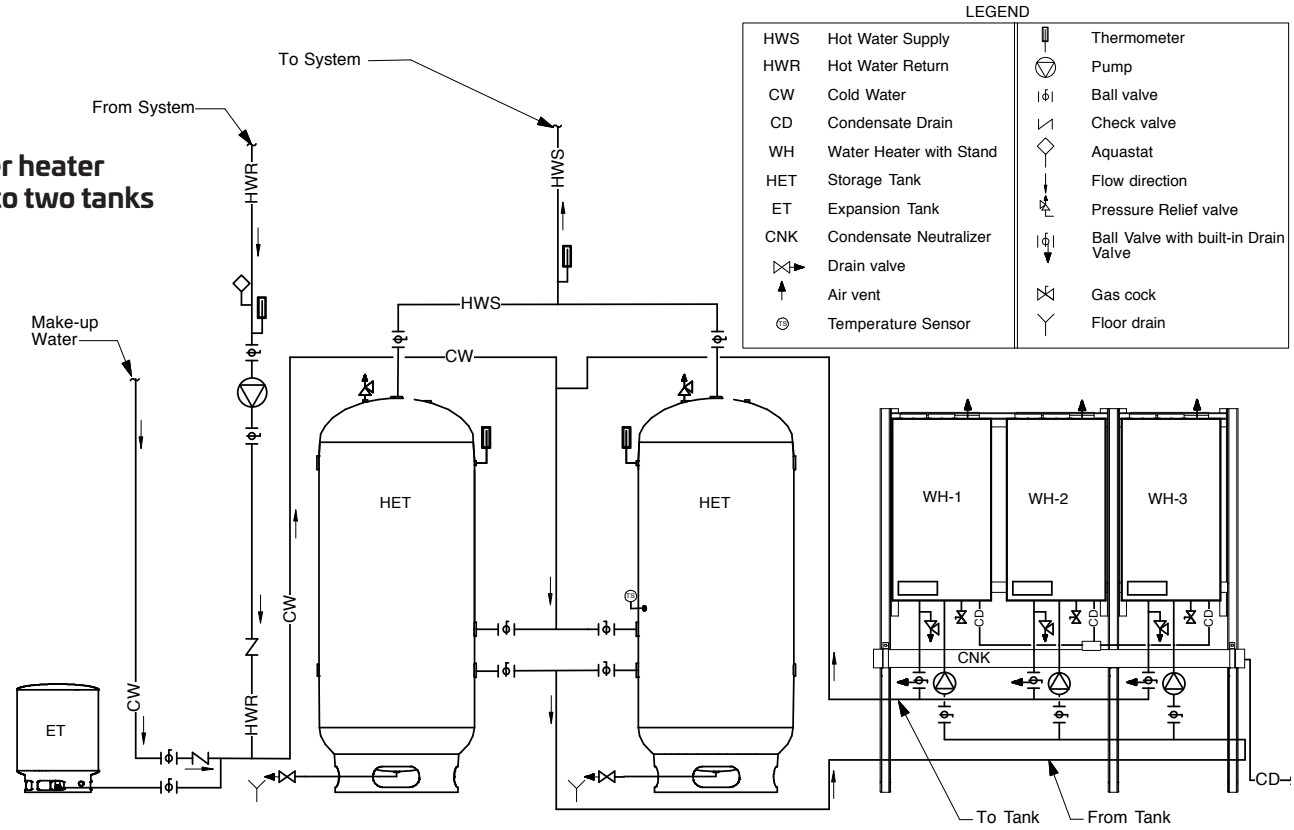

Three water heater schematic to two tanks with CWIS™

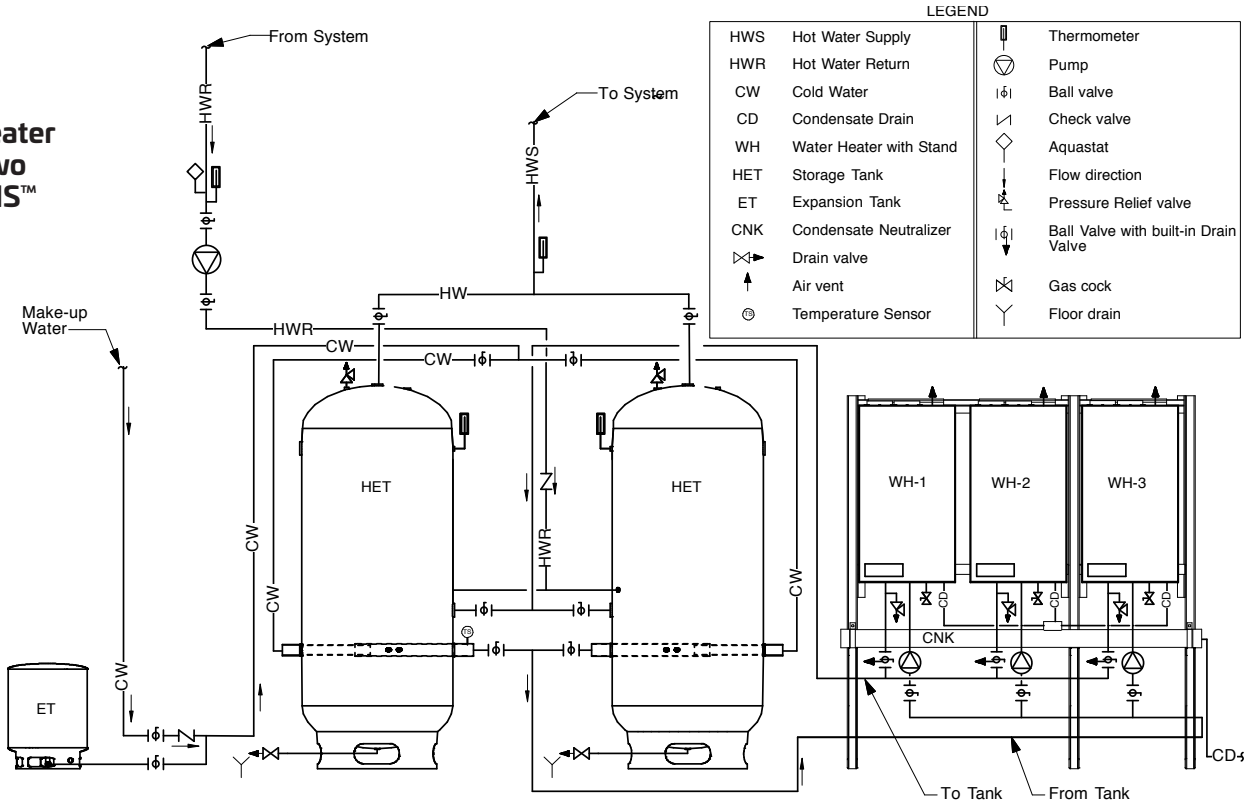

IMPORTANT NOTE: The above are representative drawings; must conform to local codes. Consult factory for Custom System Solutions.

PART 6. START-UP PROCEDURES

A. ITEMS TO BE CHECKED BEFORE LIGHTING THE APPLIANCE

It is recommended that you read this entire section of Start-Up Procedures to get a better understanding of how the appliance operates before you start the unit and use LIT91111 (Start-Up Checklist) as a check and to document and confirm all conditions are correct. All appliance start ups should be conducted by properly qualified professionals.

1. Make sure that you follow the lighting instructions before running the appliance.
2. Check and make sure the circulating pump is running, and that the pressure transducers and/or flow switch are operating correctly.
3. Make sure that the Gas is turned on outside the bottom of the cabinet of the appliance.
4. Double check to be sure the temperature setting is correct.
5. Make sure the unit is properly grounded and the electrical wiring meets the requirements of the Electrical section (Part 2, Section A).
6. Make sure that no valves are placed between the relief valve and the appliance. The relief valve must be installed in such a manner that the discharge will be conducted to a suitable place for disposal when relief occurs. Ensure that no reducing coupling or other restriction is installed in the discharge line, and that the discharge line is installed to allow complete drainage of both the valve and the line.
7. Turn on the power to the appliance. The Setpoint Temperature of the appliance will appear in the display at this time. If a fault code appears, correct the fault before operating. The appliance will now run its pre-purge and ignition cycles, then begin heating, which will be indicated by the orange flame in the lower right corner of the display.

B. LIGHTING INSTRUCTIONS

FOR YOUR OWN SAFETY, READ BEFORE OPERATING!

1. This appliance does not have a pilot light. It is equipped with an ignition device which automatically lights the burner. Do not try to light the burner by hand.
2. BEFORE OPERATING smell all around the appliance area for gas. Be sure to smell next to the floor because some gas is heavier than air and will settle on the floor.

⚠ WARNING

If you do not follow these instructions exactly, a fire or explosion may result, causing property damage, personal injury, or loss of life.

WHAT TO DO IF YOU SMELL GAS

- Do not try to light any appliance.
- Do not touch any electric switch; do not use any phone in your building.
- Immediately call your gas supplier from a neighbor's phone. Follow the gas suppliers' instructions.
- If you cannot reach your gas supplier, call the fire department.

B. LIGHTING INSTRUCTIONS (continued)

3. Turn on gas shutoff valve (located outside the cabinet on the bottom of the appliance) so that the handle is aligned with the gas pipe. If the handle will not turn by hand, don't try to repair it; call a qualified service technician. Force or attempted repair may result in a fire or explosion.
4. Do not use this appliance if any part has been under water. Immediately call a qualified service technician to inspect the appliance and to replace any part of the control system and any gas control which has been under water.
5. The appliance shall be installed so the gas ignition system components are protected from water (dripping, spraying, rain, etc.) during appliance operation and service (circulator replacement, condensate trap, control replacement, etc.).

C. OPERATING INSTRUCTIONS

1. **STOP!** Make sure you have read the safety information above.
2. Turn off all electric power to the appliance.
3. This appliance is equipped with an ignition device which automatically lights the burner. Do not try to light the burner by hand.
4. Turn gas shutoff valve clockwise to "off" The handle will be horizontal; do not force it.
5. Wait five (5) minutes to clear out any gas. If you then smell gas, STOP! Follow the instructions from Section B: Lighting Instructions in the safety information. If you don't smell gas, go to the next step.
6. Turn the gas shutoff valve counter clockwise to "on" The handle will be vertical.
7. Turn on all electric power to appliance.
8. Set the thermostat to the desired setting.
9. If the appliance will not operate, follow the instructions "To Turn Off Gas To Appliance" (Part 7, Section F, and call your service technician or gas supplier.

D. INI PROCESS AND SERVICE PROCEDURES

The HOT™ Controls, contain a unique function, they track the accuracy, degradation and fouling of all connected sensors and pressure transducers and the major components of the system; appliance heat exchanger, fan, pump and igniter.

This tracking is accomplished by taking readings of and creating trend lines for each mentioned item and then running calculations of some versus others to determine how the need for maintenance of specific components is progressing.

Aside from the use of up to 11 different sensors to monitor items like incoming gas and leaving fan pressure and pressure at the exiting side of the heat exchanger and condensate drain connection, we have an initialization (INI) process that takes place automatically in the background to collect this data during steady state conditions and record it, to populate the trend lines.

The creation of a baseline: Zero INI (Z-INI), is an important step in this process and normally occurs during the commissioning of the system. Within 2 minutes of powering the appliances up, a question will be presented on screen: "A ZERO INI IS REQUIRED—RUN NOW?" YES or NO, unless the entire system is fully commissioned and operating normally, answer NO. The question will be presented every 15 minutes until you finally select "YES". It is best not to answer YES until all appliances are started and combustion set. When they are all ready, turn off power to all at the switch on the front near the display. Go back to the appliance with two displays, power it and all others on, and when the question is presented again (two minutes or less), answer YES on each individual appliance. The Z-INI should be completed in less than 10 minutes.

If you end up with the Z-INI running when things are not quite 100% as they will be when the system is up and running, not to worry, with the proper password, you can overwrite the Z-INI with a replacement, so you are sure your Z-INI is a true baseline to work from.

D. INI PROCESS AND SERVICE PROCEDURES (continued)

To force an INI to run
(this can be done by appliance or individually):

1) Enter Setup menu

2) Press the back and down arrow simultaneously for 3 sec., to enter the password screen, and enter password level 1 (there is an advanced Level 2 with more options, available if you have attended training at the Manufacturer's factory).
- Installer level – EAZ1LVL

3) The setup screen will now have additional selections, scroll down to start INI (be sure only to select Zero if you have had a commissioning issue and need an updated proper baseline to work from), and select it.

4) The INI is now in progress, and will end after a few minutes at which point normal operation will resume. A scrolling message across the bottom of each appliance (if in a Cascade) will indicate it is in process.

Note that the INI process normally occurs in the background, during no call for heat and is rarely noticed. Subsequent INI's happen on a pre-determined basis; they are based on parameter IN1 setting of 1 – 30 days and therefor can be adjusted to fit the environment of the installation. If, you have an operation that requires heat 24 hours a day, when the system setting of days between INI's has been reached, and there is a burn cycle in process, the controls will look to parameter IN2; waiting hours of burn time before a forced INI occurs; default setting of 25 hours. When that quantity of hours has been reached after the days between setting, a forced INI will occur.

A forced INI occurs like this; the burners of all appliances in the Cascade (or the stand alone appliance) are shut down, the pump is run until the gradient (moving temperatures) between the Inlet (T1) sensor and the outlet (T2.1) sensor is less than parameter IN3; with a default setting of 0.36°F/second ΔT. At the moment that setting has been reached, the INI process begins and will take a minimum of 3 minutes for a stand-alone or dual appliance system, and 7 – 8 minutes for up to 8 appliances in the Cascade.

The Cascade operating control remembers the settings of all running appliances prior to the forced shut down and immediately following the INI, it returns to those firing rates to minimize any droop in system water temperature.

From the Home screen, you can navigate to the HISTORY tab, select it and tab down to INI DATA, there you can view the recorded INI data from record 00 (Z-INI) through the last 9 that have been recorded. This is the data that decisions and notifications (if opted for) will be sent based on.

1

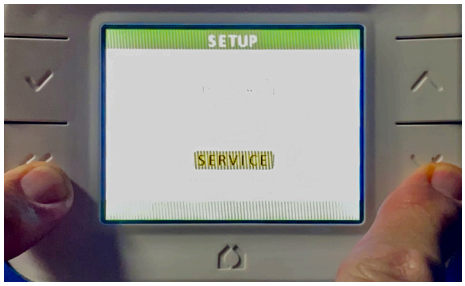

2

3

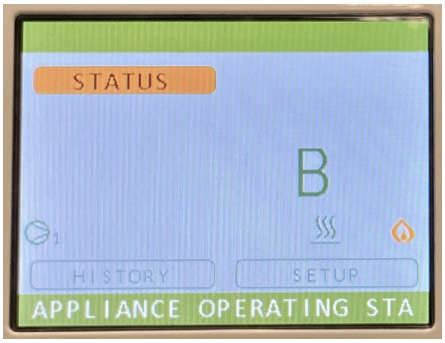

3a

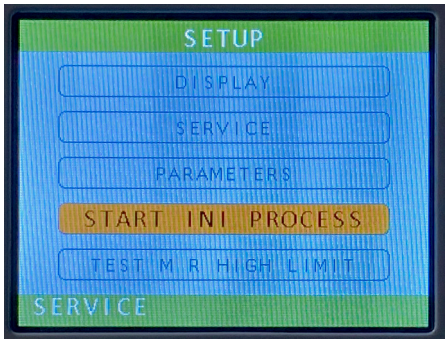

4

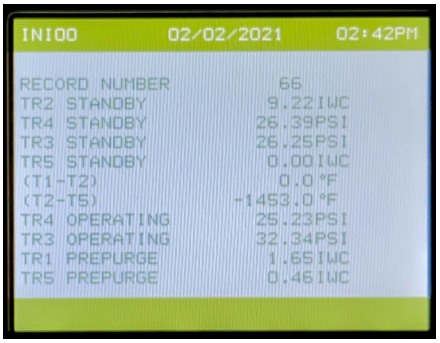

D. INI PROCESS AND SERVICE PROCEDURES (continued)

Start Service Mode Procedure:

1) Enter Setup menu

2) Scroll down to service, and select using the √ button

3) Select burner, and then start

4) The display will return to the setup menu, and service mode has begun. Select service again, and then burner.

- There will now be a new options in place of start; stop & speed Set speed to 50% using the up and down arrows., using 100% for high fire set up and minimum for low fire set.

5) Return to the home screen and select status.

6) When the status screen appears, press the down arrow once to show screen 2, showing fan speed and flame signal.

7) From here, you can watch the fan during pre-purge and ignition, as well as the flame signal strength at ignition.

8) Return to the home screen after ignition, and a flame icon in the lower right corner shows the burner on status.

9) Return to the service speed function, and adjust fan speed as needed.

10) Service mode will last for 40 minutes, or until canceled. To cancel the service function, select stop from the service menu.

1

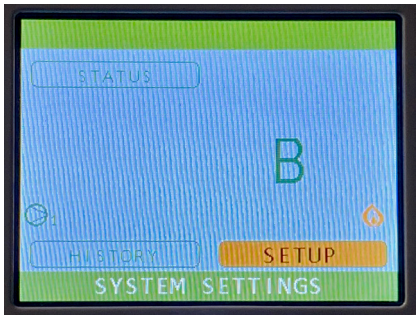

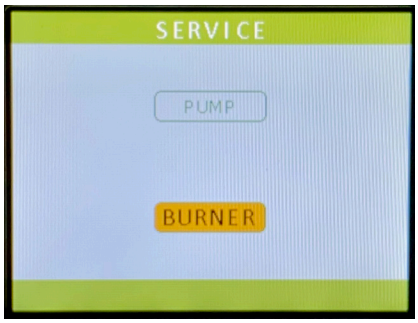

2

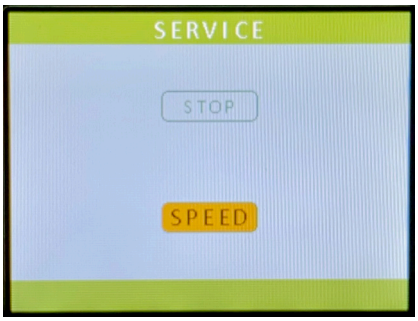

3

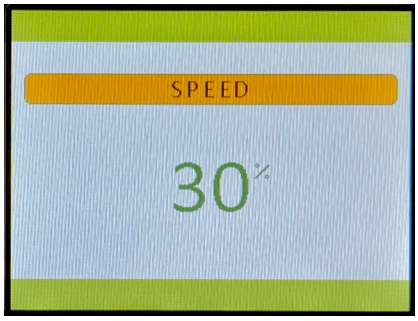

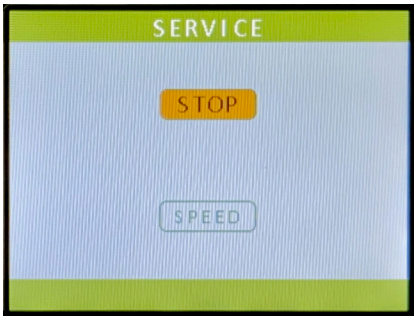

4

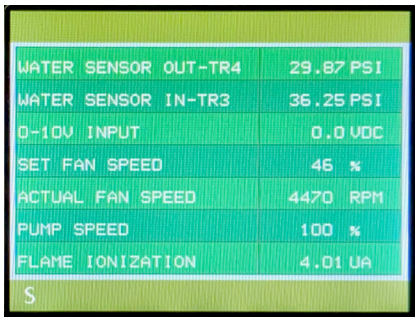

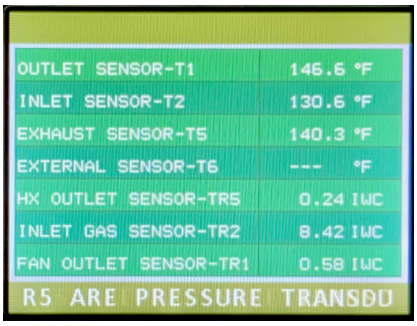

E. ADJUSTING THE TEMPERATURE ON THE APPLIANCE DISPLAY

On a single unit you change set point through the BDB, for multiple systems it is through the CDB.

Enter the menu labeled Setpoint in the upper right of the display to set the desired operating water temperature. On a boiler, this will be based on the leaving water temperature. On a water heater it will be based either on a connected external (storage tank) sensor, or, if there is none connected, it will operate based on the incoming water temperature. The range is factory-set at 50–160°F for water heaters and 50–195°F for boilers. Other special ranges are available by contacting the factory. **If other temperature settings are required, contact the Manufacturer.** Other special parameters may be set by entering a password in the display, varying from end user, installer, advanced, and factory levels. The display can show either °F or °C set in the setup menu, then display options.

SET POINTS

SET POINT GLOSSARY

Heating = System setpoint in CH

Heating Reduced = System setpoint in CH during night setback hours

Boiler for heating = System setpoint in CH when multiple applications are heated.

iDHW Hot Water Tank = Storage tank setpoint for DHW

Hot Water Reduced = DHW during setback hours.

Boiler for iDHW Load = System setpoint during iDHW demand.

Home Screen/SETPOINT:

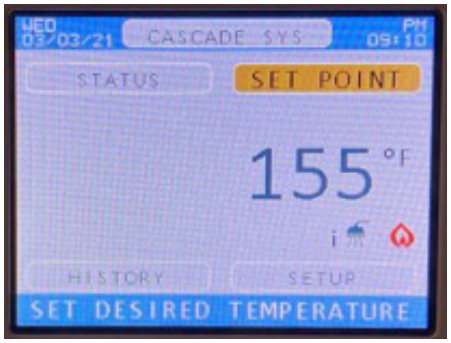

Page one of options:

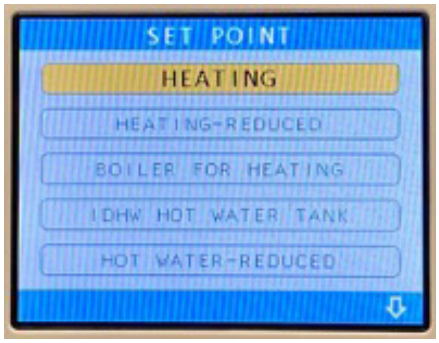

Page two, note arrow at lower right:

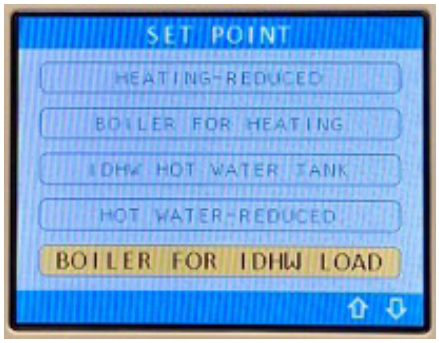

Temperature setting screen:

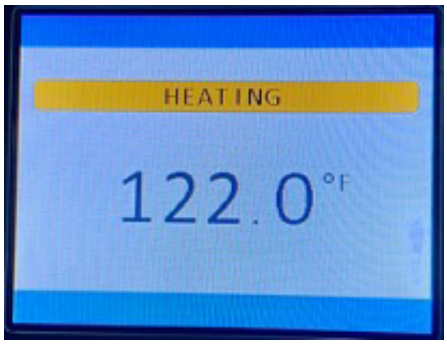

Be sure to confirm change:

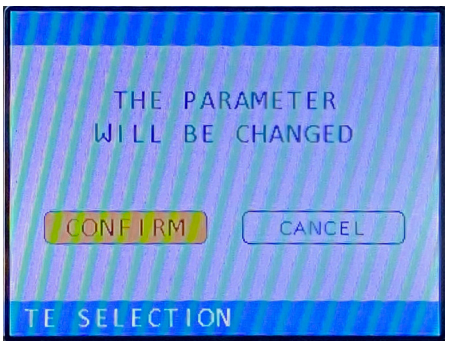

WATER HEATER OPERATING SAMPLE

All of the following parameters are controlled by a storage tank temperature sensor:

- **Setpoint** = Target Temperature (120°F) Low fire only above this point
- **Offset** = Off Setpoint (3) = 123°F off
- **Hysterese** = On Setpoint (8) (120 + 3 - 8 = 115°F)
- **Proportional Band** = Modulation range (4) (120 - 4 = 116°F, modulation begins)

The appliance turns on at 115°F and when the temperature reaches 116°F the flame will begin to modulate down (approximately 25% of the modulation range per degree F of increase in this example). At 120°F, it will be at low fire and will remain there unless the temperature drops below 120°F and it will modulate back up. If it continues to increase, it will shut down at 123°F.

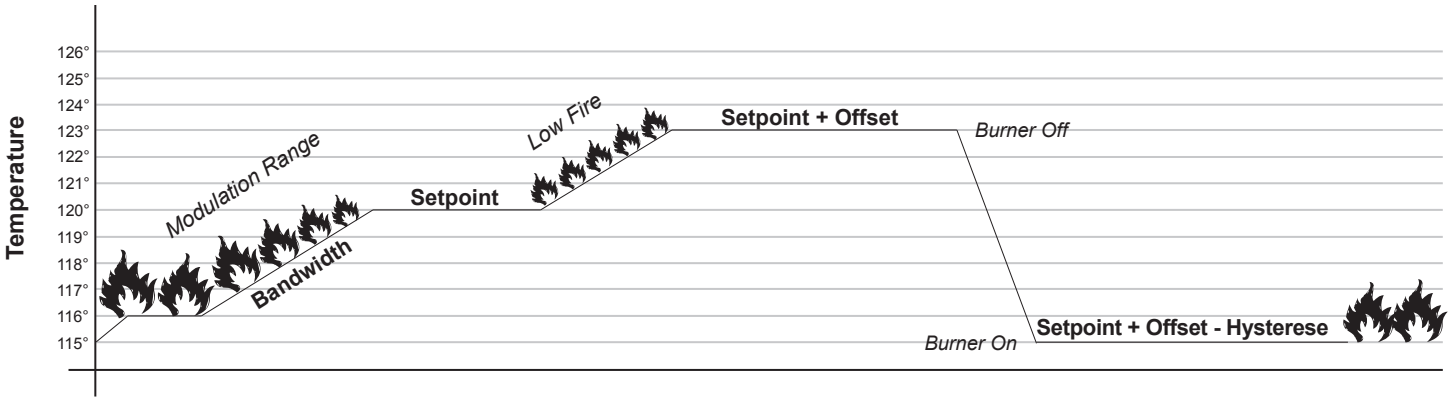

F. SEQUENCE OF OPERATION

⚠ DANGER

WATER TEMPERATURE OVER 125ºF CAN CAUSE SEVERE BURNS INSTANTLY, OR DEATH FROM SCALDS. CHILDREN, THE DISABLED, AND THE ELDERLY ARE AT HIGHEST RISK OF BEING SCALDED. SEE INSTRUCTION MANUAL BEFORE SETTING TEMPERATURE AT WATER HEATER. FEEL WATER BEFORE BATHING OR SHOWERING! TEMPERATURE LIMITING VALVES ARE AVAILABLE.

⚠ DANGER

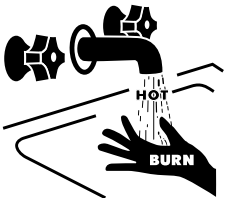

1. When power is first applied to the control, after an initialization phase, the control display will read the temperature Setpoint. The control will initially run through a self-diagnostic routine and then go into its deaeration operating mode, where it bumps the pump on and off multiple times to purge the heat exchanger of any air that may have settled there while the power is off. If there is no call for heat, the system will go into an idle state.

   NOTE: The cap on the Automatic Air Vent located on top of the appliance must remain in the loose state in order for the air to escape as required.

2. If the thermostat is calling for heat, the control module will determine if the water temperature is below the programmed set point value minus the switching differential. It will then initiate a heating cycle.

3. The control then performs selected system diagnostic checks. If all checks are successfully passed, a pre-purge cycle is initiated (the blower will be on at 80%).

4. When the pre-purge period is complete, power is applied to the spark ignitor for 4.5 seconds. Approximately 1/2 second later, flame is verified. If a flame is not verified during the trial-for-ignition, the gas valve is immediately closed and the control will return to Step 3. After four trials, if a flame is not verified, the control will go into a lockout mode. If a flame is confirmed, the control enters the heating mode. The firing rate will be based on the control's proprietary algorithm.

5. When water temperature reaches the temperature set point value, the burner will be at minimum firing rate.If,when firing at minimum rate, it reaches temperature setpoint plus offset, the gas valve closes and the control enters a post-purge state (the blower will be on at 80%). At any time if an external thermostat is being used and becomes satisfied, the gas valve will be closed immediately.

6. When the post-purge is complete, the control enters an idle state while continuing to monitor temperature and the state of other system devices. If a call-for-heat is received, the control will automatically return to Step 2 in sequence and repeat the entire operating cycle.

7. Built in freeze protection: all models will automatically turn the pump on if the heat exchanger reaches 41°F and the burner if it reaches 37°F, it will turn off at 50°F.

   NOTE: Power must be left on for this protection to function.

During the idle state and heat state, if the control detects an improper operating state from external devices, such as the high-limit switch, the control will illuminate an error code in the display.

G. 0–10V DIRECT CONTROL

Direct Control

In the situation where direct control of the appliance is desired (such as from a Building Management System), the appliance can be programmed to receive a 0–10 volt DC signal to control operation.
Note: This operation is only possible in individually-controlled units (i.e.: not Cascaded) and when each is individually vented.

There are two variations of this kind of external control (see Parameter S-18): Load Control and Set Point Control. In Load Control, the voltage signal controls the burner firing rate. In Set Point Control, the voltage signal controls the temperature set point of the appliance. (This is similar to how the appliance is controlled when operating without an outside signal.)

Setting up Direct Control

There are three steps required to set up this mode of operation. First, connect the incoming voltage signal to pins 5 and 6 on the control board.

Next, remove the jumper from the remote thermostat terminals (pins 11 and 12. If this is not done, the appliance will fire based on its internal set point when the voltage drops below 1.0VDC. If the appliance

is set up with any other external signal here, this should be removed as well, or that external signal will take over when the 0-10VDC control signal drops below 1.0VDC.

Next, go to Parameter S18 (PS18) in the Parameter menu and choose the appropriate control setting. (include picture of menu or HMI page)

The PS18 settings are:

- 0=Off (default setting--no external control, any external voltage signal ignored)
- 1=Load Control
- 2=Set Point Control

Load Control mode (PS18=1)
When a 0-10VDC input is used for load control, the range of 0-10VDC corresponds directly to a modulation percentage (burner firing rate). An input of 10.0VDC results in the maximum default fan speed (modulation) for that appliance, and 1.0VDC results in the minimum default fan speed. The fan speed displayed on the appliance will depend on the range of the fan for that particular appliance.

Type	Minimum Fan Setting (1.0VDC)	Maximum Fan Setting (10.0VDC)	Voltage increment
299	25%	100%	8.33% fan speed
399	25%	100%	8.33% fan speed
599	27%	100%	8.11% fan speed

The following is an example of the effect of changing the voltage signal on an appliance in Load Control mode:

- The operational range of a 399.x fan is 25%–100%
- 0-0.9V = Appliance off
- 1.0V = 25% Fan speed
- 1.3V = 27% Fan speed (3% modulation)
- 4.0V = 49% Fan speed (33% modulation)
- 6.8V = 72% Fan speed (64% modulation)
- 8.9V = 91% Fan speed (88% modulation)
- 10.0V = 100% Fan speed (100% modulation)
- Each volt = 8.33% fan speed or 11.11% modulation

Set Point Control mode (PS18=2)
When a 0–10VDC input is used for Set Point Control, the range of 0–10VDC corresponds directly to the temperature set point. Contact customer support for assistance with using this mode as multiple parameters may be modified to alter bandwidth and set point sensitivity..

H. OUTDOOR RESET FUNCTION

Curve or slope—set using the display option in heating set point.

(FIGURE 6–1) OUTDOOR RESET FUNCTION

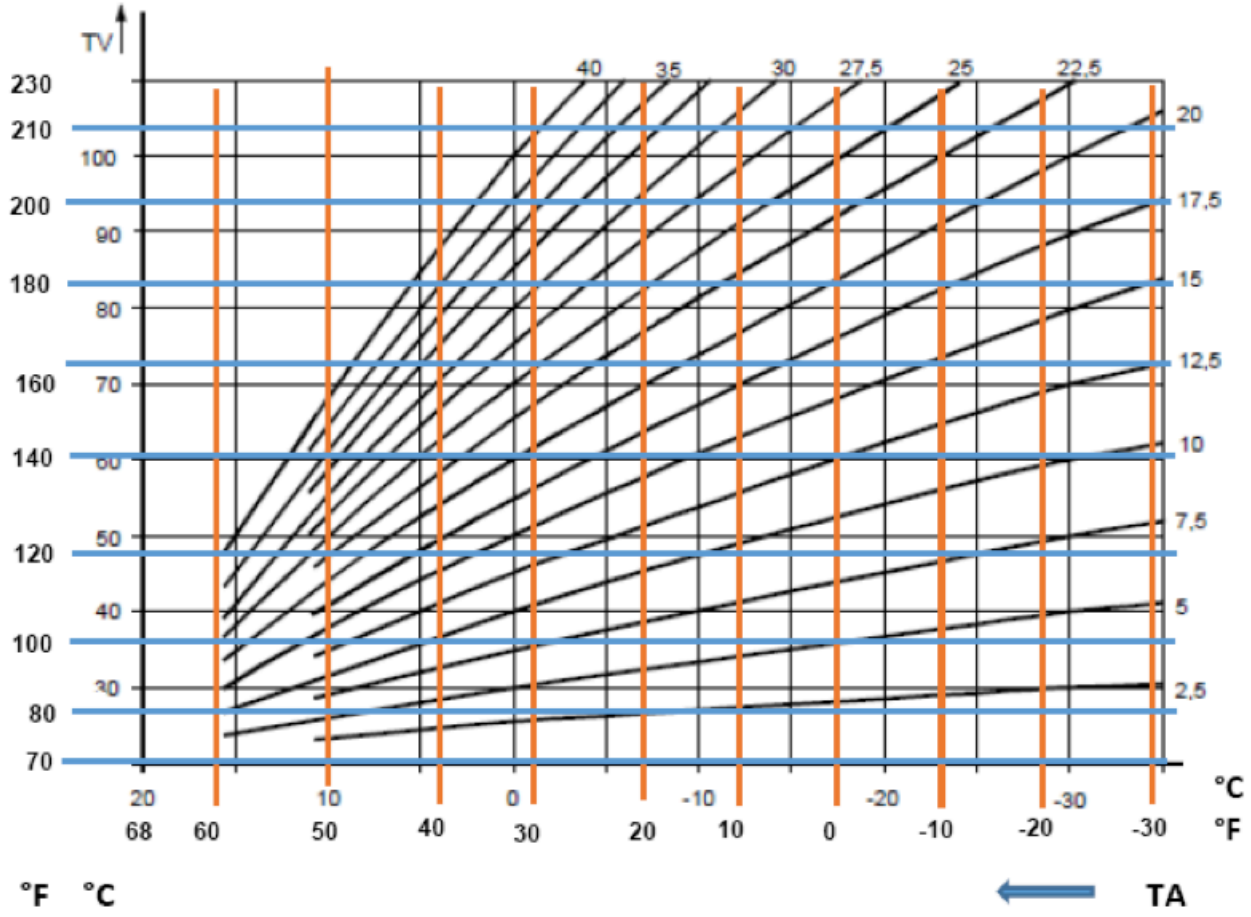

1. You must have the Outdoor Sensor (10K) sensor installed, and the power must have been cycled on and off after its installation.
2. Set the outdoor curve parameter using the chart in Figure 6-1 (TA = outdoor temperature, TV = boiler water temperature), default is 180°F water at -10°F outdoor—slope of 18.
3. Set the Warm Weather Shutdown temperature (default is 64.4°F); above this temperature, there is no call for heat.
4. Set the building type correction factor (if desired); default is 1.0:

   A. Old building, not insulated 1.2

   B. Building with thick walls >12 inches 1.3

   C. Normal building, normal insulation 1.0

   D. New building, well insulated 0.9
5. For comfort adjustment after start up, an additional boiler water temperature offset (either higher or lower) is also available in the set up screen, up to 18°F higher or lower than the curve calculation.

PART 7. SERVICE AND MAINTENANCE

A. SERVICING THE APPLIANCE

1. Shut off the power supply to the appliance (See Part 1, Section D).
2. Remove the front cover security screw(s).
3. Undo the two latches at the bottom of the cover (if applicable).
4. Remove the cover.

B. PLACING THE APPLIANCE INTO NORMAL OPERATION

1. Replace the front cover in the normal position.
2. Close the latches on the bottom of the cabinet (if applicable).
3. Replace the security screw(s).
4. Turn on the power supply to the appliance.

To enter manual firing operation, enter SERVICE, in MODE—see Part 6, Section D

C. TESTING THE MANUAL RESET HIGH LIMIT

The HOT™ Controls (.2 configuration), contain a unique function, they use both pressure transducers and temperature thermistors to monitor appropriate flow through the heat exchanger of the appliance. The .3 configuration uses a water flow switch. In both configurations, there are two high limit sensors, both are set through parameters, however, only one requires a manual reset when it is tripped, and often requires an annual test to confirm its proper operation.

To test the manual reset high limit:

1. Enter Setup menu, then enter the Password, then Test M R High Limit
2. Set the temperature you want the MHRL to open at, it will show the current setting as a default, you should select a temperature less than that to complete the test without overheating the hot water system, just push the down arrow until the appropriate temperature and then push √:

1

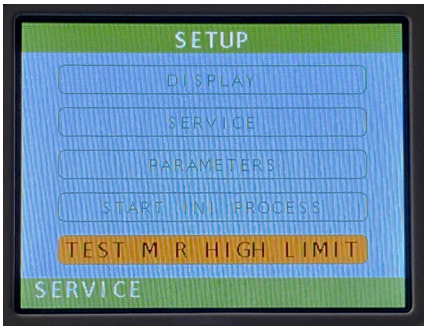

2

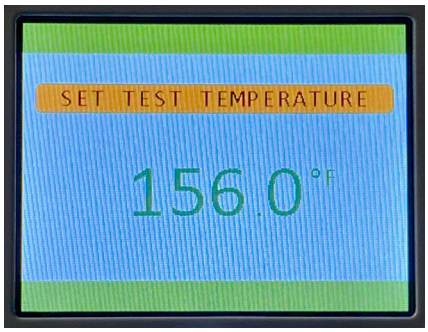

C. TESTING THE MANUAL RESET HIGH LIMIT (continued)

3. The high limit test is only active for 10 minutes as a default, you can select a time less than that if desired, just push the down arrow until the appropriate time and then push √:
   - The fact that the test is in progress will be indicated on the home screen scrolling message at the bottom, while it is active:
   - You may also place the appliance in SERVICE MODE now to get the appliance to run at a higher firing rate and surpass the temporary MRHL setting sooner.
   - When that setting is exceeded, the unit will shut down immediately and indicate a Hard Lock Out and H16 code. It will need to be reset to allow normal operation.
   - Note that if you reset it right away and you have not reached the number of minutes you set for the test period and the temperature is now below your test setting and below your setpoint, it will run and likely trip again.

3

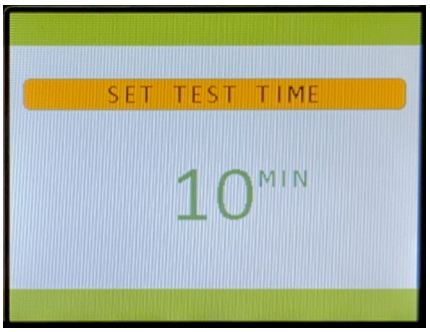

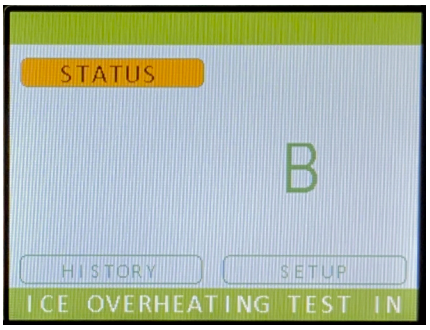

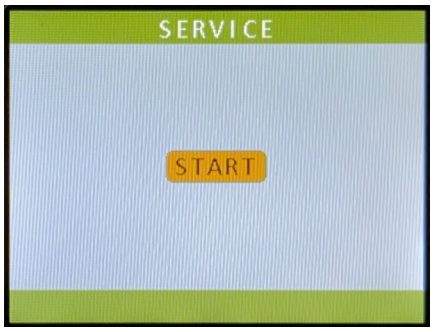

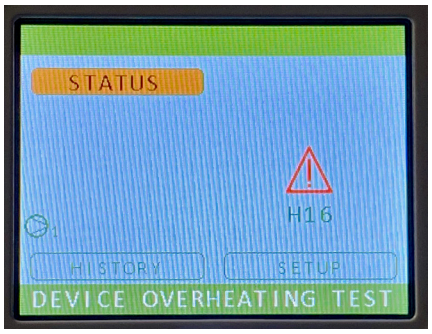

4

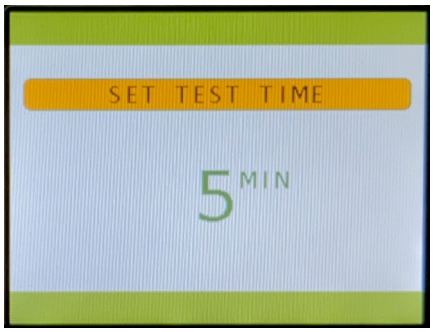

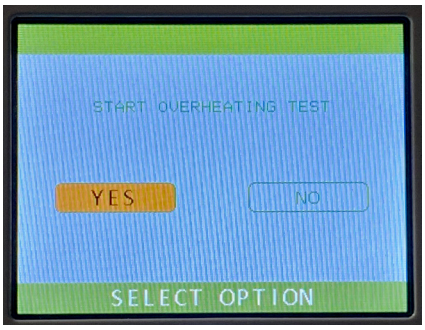

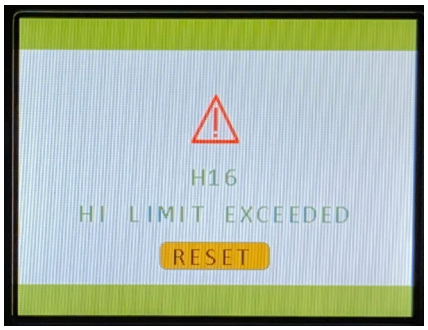

D. SOFT LOCKOUT CODES (See Section 1, Part A for Sensor Locations and Uses)

(TABLE 7-1) CCB SOFT LOCK OUT (SLO) CODES

Code	Cause	Recommended Action
CCB01	Sensor S1 fault	Check that the S1 sensor is connected
CCB02	Sensor S2 fault	Check that the S2 sensor is connected
CCB03	Sensor S3 fault	Check that the S3 sensor is connected
CCB04	Sensor S4/SZ1 fault	Check that the S4/SZ1 sensor is connected
CCB05	Sensor S5/SZ2 fault	Check that the S5/SZ2 sensor is connected
CCB06	Sensor S6 fault	Check that the S6 sensor is connected
CCB07	Sensor SZ3 fault	Check that the SZ3 sensor is connected
CCB08	Sensor zone 4 fault	Check that the zone 4 sensor is connected
CCB09	Sensor zone 5 fault	Check that the zone 5 sensor is connected
CCB10	Sensor zone 6 fault	Check that the zone 6 sensor is connected
CCB11	Sensor zone 7 fault	Check that the zone 7 sensor is connected
CCB12	Sensor zone 8 fault	Check that the zone 8 sensor is connected
CCB15	Communication error via Modbus programming	Quantity of programmed appliances does not match quantity of connected appliances.
CCB20-CCB27	Communication error with a specific appliance; A = CCB 20… H = CCB 27	Check specific appliance to see that it is powered on, if yes, then check all communication connections at display and main boards
CCB200	EEPROM fault	Check that the EEPROM is connected properly

(TABLE 7-2) BCB SOFT LOCK OUT (SLO) CODES

*Codes may appear with an A, B, or C as a suffix denoting the number of times the code has appeared since the last Initialization (INI). Some SLO's are accompanied by a reduction of the maximum firing rate; A=80%, B=50%, C=30%. After the C suffix appears, the next code of that kind becomes an HLO (manual reset required).

Code	Cause	Recommended Action
A1*	Excessive pressure differential (ΔP) on water side of heat exchanger	Check for scaling or blockage on water side of heat exchanger, also check pump performance. If this SLO is indicated while the unit is firing, it is doing so at a reduced BTU input; low enough to stay below that maximum ΔP set point.
B01	Pressure too high at condensate drain connection during Stand By	Look for condensate backing up into combustion side of heat exchanger.
B02	Pressure too high at condensate drain connection during pre-purge	Insure condensate drain system is flowing freely, and vent is clear of obstructions. Also, be sure the Z-INI has been initiated.
B03	Pressure too low at condensate drain connection during pre-purge	Check for condensate (water) in the condensate neutralizer (if equipped) or the condensate trap at appliance outlet. If it is dry, add water to form trap. The appliance also will initiate an auto-filling process for the condensate trap, indicated on the screen during this operation. Also, be sure the Z-INI has been initiated.
B04	Pressure at flue/condensate sensor is too low	Check flue gas vent connection or sensor connection located at condensate drain line. Also check for a disconnected or open condensate drain line and last, look for a leak in the heat exchanger outer casing (behind the insulation).
DW7*	Temperature rise (ΔT) through heat exchanger is too high	Unit is operating at a reduced BTU input - check for scaling or blockage on water side of heat exchanger, also check pump performance.
FL05*	Flue gas temperature too high	Unit is burning at a reduced BTU input rate. The cause of the high flue gas temperature should be investigated and corrected ASAP
FL09*	Fouling of the fire side of the heat exchanger	Unit is burning at a reduced BTU input rate. A combustion side inspection and cleaning should be scheduled ASAP.
FL13	Flue gas sensor (T5) fault (not connected or open status)	Check the condition of the connectors and wires from the card edge connector at the board to the flue gas sensor on the appliance.
FL14	Flue gas sensor (T5) fault (short circuit status)	Take an OHM reading at the connector on the flue gas sensor - compare it to the chart in Part 7, Section I, replace if out of range.
G01*	Gas supply pressure too low	If this occurs at the beginning of an ignition cycle, this SLO will stay until the pressure is high enough for proper ignition. If this occurs while the unit is firing, and it continues to fire, it is doing so at a reduced BTU input low enough to stay above that minimum pressure set point.
H01	Outlet sensor (T1.1, 1.2) fault (not connected or open status)	Check the condition of the connectors and wires from the card edge connector at the board to the outlet sensor on the appliance.
H02	Inlet sensor (T2) fault (not connected or open status)	Check the condition of the connectors and wires from the card edge connector at the board to the inlet sensor on the appliance.
H04	Outlet sensor (T1.1, 1.2) fault (short circuit status)	Take an OHM reading on the outlet sensor - compare it to the chart in Part 7, Section I, replace if out of range.

D. SOFT LOCKOUT CODES (continued)

(TABLE 7-2) BCB SOFT LOCK OUT (SLO) CODES ' (continued)

Code	Cause	Recommended Action
H05	Inlet sensor (T2) fault (short circuit status)	Take an OHM reading on the inlet sensor - compare it to the chart in Part 7, Section I, replace if out of range.
H07/09	Calibration between inlet (T2) and outlet (T1) water temperature sensors indicates too great a differential.	Test both sensors against the actual temperature and OHMs as shown in the chart in Part 7, Section I, replace as required. The appliance will continue to operate, but at a reduced input until the required correction has been resolved.
H11	High ΔT	See Part 7, Section F
H24*	High Limit set point has been exceeded	Appliance restarts, but at a reduced input; after 3 restarts, the appliance gets a Manual Lock Out (HLO) and needs the cause resolved immediately. Possible causes are high ΔT, temperature setpoint versus high limit setting too close or bad sensor.
ID01	First INI process data missing	Run the Z-INI; starting Initialization numbers must be tested and the saved for all connected sensors in a number of conditions.
ID02	EMB EEPROM fault (2)	Reset the fault, cycle power on and off, if the fault reappears, the EMB–EEPROM is corrupted.
ID03	EMB EEPROM fault (1)	Reset the fault, cycle power on and off, if the fault reappears, the EMB–EEPROM is corrupted.
ID04	Internal fault (gv1)	Reset the fault, cycle power on and off, if the fault reappears, the EMB–EEPROM is corrupted.
ID05	Internal fault (gv2)	Reset the fault, cycle power on and off, if the fault reappears, the EMB–EEPROM is corrupted.
ID06	Internal fault (gv3)	Reset the fault, cycle power on and off, if the fault reappears, the EMB–EEPROM is corrupted.
ID09	Fan speed error	Cycle power off, check the four-wire fan connection; wires and each end at connectors. If all ok, cycle power back on and if fan Speed error reappears, replace fan.
ID11	Flame proof indicated without flame present	Cycle power off, check Igniter, Ignition cable and cable ends, if moisture present, dry thoroughly. Cycle power back on.
ID13	Low voltage to appliance	Check voltage - this fault occurs when the supply voltage is more than 10% less than rated supply.
ID14	High voltage to appliance	Check voltage - this fault occurs when the supply voltage is more than 15% greater than rated supply.
ID16 A	External sensor (T6) fault (not connected or open status)	Check the condition of the connectors and wires from the card edge connector at the board to the terminal strip to the external sensor in the piping or Low Loss Header.
ID16 B	External sensor (T6) fault (short circuit status)	Take an OHM reading on the wires from the external sensor in the piping or low lass header - compare it to the chart in the Part 7, Section I, replace if out of range.
ID19 A	Tank sensor (T3) fault (not connected or open status)	Check the condition of the connectors and wires from the card edge connector at the board to the terminal strip to the storage tank sensor.
ID19 B	Tank sensor (T3) fault (short circuit status)	Take an OHM reading on the wires from the storage tank sensor - compare it to the chart in Part 7, Section I replace if out of range.
ID20 A	Outdoor sensor (T4) fault (not connected or open status)	Check the condition of the connectors and wires from the card edge connector at the board to the terminal strip to the outdoor air sensor.
ID20 B	Outdoor sensor (T4) fault (short circuit status)	Take an OHM reading on the wires from the outdoor air sensor - compare it to the chart in Part 7, Section I, replace if out of range.
ID80	Boiler is configured for cascade, but no cascade manager present	Check settings in individual appliance parameter S25; should be a different value in each appliance between A–H. **NOTE:** There should not be a SET POINT option available on the home screen of the appliance if S25 is set properly.
ID87	Actual fan speed is lower than specified fan speed, during speed up.	The appliance is waiting to allow the fan time to reach the required rpm, if it does not achieve it in 30 seconds, ID88 will become the new fault code.
ID88	Actual fan speed did not reach required rpm in the time allotted.	If the actual fan speed is more than +/- parameter F20 rpm off the set fan speed after pre-purge time ID88 is shown. This fault will correct itself after the correct fan speed is achieved.
ID89	T1.1-T1.2 ΔT fault	The ΔT on the duplex outlet sensor (T1.1 & T1.2) is greater than 18˚F. Test both sensors against the actual temperature and OHMs as shown in the chart in Part 7, Section I, replace as required.
ID95	EEPROM key blank	EEPROM key is blank with no data
ID97	EEPROM key missing	EEPROM key is not connected or not communicating
P04*	No water flow from the pump	Check for pump electrical issues i.e. no power to the pump, pump motor is seized, pump is constantly powered and running.
P05*	Reduced water flow through appliance	Check for partially closed valves, pump impeller fouling etc. Appliance is operating at a reduced BTU capacity to avoid heat exchanger damage.
S13	Additional safety fault	Check the status of the additional safety input switch when call for heat is established, and P7 time elapsed, and continuously thereafter during a burn cycle.
W01*	Maximum water pressure exceeded	Water pressure too high (within 10% of pressure relief valve rating), confirm cause and correct. Unit is operating at a reduced BTU capacity to try and avoid the relief valve opening.
W04*	Water pressure is less than minimum setting	Water pressure too low (within 10% of minimum pressure required), confirm cause and correct. Unit is operating at a reduced BTU capacity to try and avoid any damage to the heat exchanger.

E. APPLIANCE HARD LOCKOUT CODES

(TABLE 7-3) BCB HARD LOCKOUT (HLO) CODES

Code	Cause	Recommended Action
A1/A2	Excessive pressure differential (ΔP) on water side of heat exchanger	Check for scaling or blockage on water side of heat exchanger, also check pump performance.
B03	Neutralizer/trap has little or no Condensate (water)	Fill neutralizer (or trap if not a factory neutralizer) with water to avoid flue gases spilling into the room through a dry trap.
B04	Pressure at flue/condensate sensor is too low	Check flue gas vent connection or sensor connection located at condensate drain line. Also check for a disconnected or open condensate drain line and last, look for a leak in the heat exchanger outer casing (behind the insulation).
DW7	Temperature rise (ΔT) through heat exchanger is too high	Appliance has been through multiple tests and checks including operating at a reduced input to avoid this shut down. The ΔP across the heat exchanger indicates reduced water flow. Check the pump performance, check for partially closed valves and if all ok, perform a descaling operation on the water side of the heat exchanger.
FL01	Flue gas temperature has exceeded the maximum safe level set in the operating parameters	Flue gas temperature setting has been exceeded by a significant amount even after operation at a reduced firing rate. Check entire burner assembly, if ok, then a complete fire side cleaning must be initiated immediately.
FL05	Flue gas temperature too high	Unit is burning at a reduced BTU input rate. The cause of the high flue gas should be investigated and corrected ASAP—See FL01
FL09	Fire side of heat exchanger is severely fouled	Remove burner and check condition of fire side of tubes in the burner area.
G01	Gas pressure too low	Find cause of low pressure and correct; piping or regulator sizing is the general culprit
G03	Gas pressure too high during a burn cycle	Correct the cause of the high gas pressure - either adjust regulator or replace and repair as required - maximum allowed by code is 14"w.c.
H15/H16	Water temperature limit set point exceeded	Check set point(s), sensors, pumping etc. Correct cause of high water temperature
H24	Water Temperature Manual Reset High Limit set point exceeded	Check set point(s), sensors, pumping etc. Correct cause of high water temperature
ID01	First INI process data missing	Run the Z-INI; starting Initialization numbers must be tested and the saved for all connected sensors in a number of conditions.
ID02	EMB EEPROM fault (2)	Reset the fault, cycle power on and off, if the fault reappears, the EMB–EEPROM is corrupted.
ID03	No valid data on microcontroller Flash memory	Reset the fault, cycle power on and off, if the fault reappears, the EMB–EEPROM is corrupted.
ID04	Internal fault (gv1)	Reset the fault, cycle power on and off, if the fault reappears, the EMB–EEPROM is corrupted.
ID05	Internal fault (gv2)	Reset the fault, cycle power on and off, if the fault reappears, the EMB–EEPROM is corrupted.
ID06	Internal fault (gv3)	Reset the fault, cycle power on and off, if the fault reappears, the EMB–EEPROM is corrupted.
ID09	Fan speed error	Cycle power off, check the four-wire fan connection; wires and each end at connectors. If all ok, cycle power back on and if fan Speed error reappears, replace fan.
ID12	Flue thermostat open.	Check for open flue temperature switch, if parameter S24=1
ID89	Fan is not running	Either fan is not running (check wiring or replace), or factory programming has been altered (consult factory).
ID96	Wrong EEPROM key connected	Install proper EMB EEPROM, if it cannot be found, contact the factory for assistance - be sure to have model and serial number of the appliance in question.
ID99	BDB Reset action finished	There have been too many resets, a concerted effort must be made to find the cause of the fault and correct it. This is a timed action, and the unit cannot be reset until the time has elapsed. Contact the factory with further questions. This fault will require both a power reset and then an on-screen fault reset via the HISTORY tab.
IG2/IG3	Too many restarts or relights after no-flame.	Appliance has been through multiple tests and checks including trying to ignite at different inputs to avoid this shut down. Combustion related items must be checked, including air/gas ratio, ignition cable and igniter. Check flow switch if installed.
IG4/IG5	Too many restarts or relights after no-flame.	Appliance has been through multiple tests and checks including trying to ignite at different inputs to avoid this shut down. Combustion related items must be checked, including air/gas ratio, ignition cable and igniter. Check flow switch if installed.
IG19	Too many attempts for ignition	Appliance has been through multiple tests and checks including trying to ignite at different inputs to avoid this shut down. Combustion related items must be checked, including air/gas ratio, ignition cable and igniter. Check flow switch if installed.
IG27	Too many attempts for ignition	Appliance has been through multiple tests and checks including trying to ignite at different inputs to avoid this shut down. Combustion related items must be checked, including air/gas ratio, ignition cable and igniter. Check flow switch if installed.
P04	Low or no water flow	Check for pump electrical issues i.e. no power to the pump, pump motor is seized, pump is constantly powered and running.
S13	Additional safety circuit (terminals 20, 21) open	Check flow switch, burner door and heat exchanger rear wall high temperature limits

(TABLE 7-3) BCB HARD LOCKOUT (HLO) CODES (continued)

Code	Cause	Recommended Action
P05	Water flow too low through appliance	Check for partially closed valves, pump impeller fouling etc.
P06	Water flow blocked during a burn cycle (proof of flow)	Check for partially closed valves, pump impeller fouling etc.
W04	Minimum water pressure	Water pressure too low (within 10% of minimum pressure required), confirm cause and correct.

NOTE: In many cases, a "hard lockout" will indicate that there is something wrong with the appliance, that should be serviced or repaired.

EXAMPLE:
If there is a loss of flow due to an air bubble passing through the appliance (sensed via the water pressure transducers), the appliance will shut down and display a temporary fault of P04 or P05 A, B, or C. When flow resumes and a waiting time has elapsed, the control board will perform a pre-start diagnostic and then resume a burn cycle.

F. TO TURN OFF GAS TO THE APPLIANCE

1. Set the thermostat to lowest setting.
2. Turn off power switch on front of unit.
3. Turn off all electric power to the appliance if service is to be performed.
4. Turn gas shutoff valve clockwise to "off." Handle will be horizontal. Do not force.

G. PUMP & WIRING CONTROL

The appliance control board has an on-board relay for controlling the circulating pump. On a call for heat, the pump will start, allowing the water flow proving circuit to be made and the pre-start diagnostic to continue. After the call for heat has been satisfied, the pump will continue to run for the factory programmed period of time (1 minute) and then shut off. For water heating applications an external temperature sensor must be mounted in the water storage tank. For heating applications, the call for heat must come from an external source (room thermostat etc.).

H. STATUS READINGS

(FIGURE 7-4) STATUS READING INSTRUCTIONS

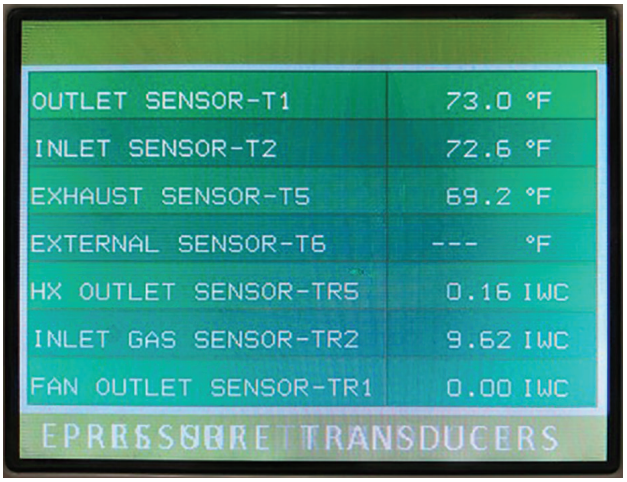

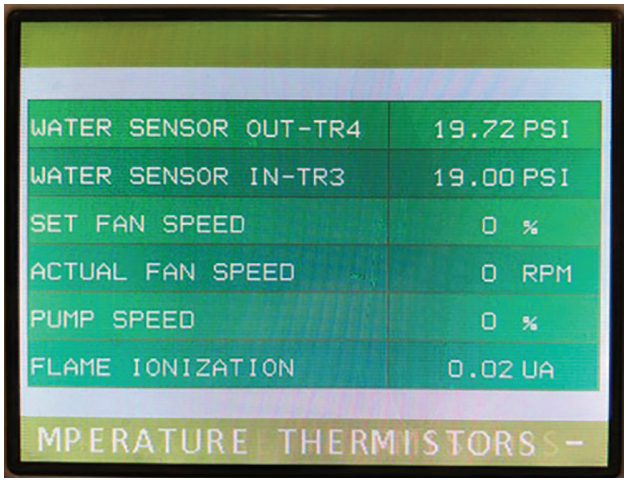

Sensor list and other details on screens will vary from system to system

I. APPLIANCE SENSOR RESISTANCE TABLE

(TABLE 7-5)

TEMPERATURE (°F)	RESISTANCE (OHM)	TEMPERATURE (°C)	RESISTANCE (OHM)
32	32550	0	32550
41	25340	5	25340
50	19870	10	19870
59	15700	15	15700
68	12490	20	12490
77	10000	25	10000
86	8059	30	8059
95	6535	35	6535
104	5330	40	5330
113	4372	45	4372
122	3605	50	3605
131	2989	55	2989
140	2490	60	2490
149	2084	65	2084
158	1753	70	1753
167	1481	75	1481
176	1256	80	1256
185	1070	85	1070
194	915	90	915
203	786	95	786

PART 8. MAINTENANCE

A. PERIODIC MAINTENANCE AND INSPECTIONS

All high efficiency condensing appliances will require more regular maintenance (cleaning) than their non-condensing counterparts. Failure to do so may result in damage to the appliance that is not covered under warranty. Failure to follow all of the instructions contained in this manual may also cause premature product failure that may not be covered under warranty.

Periodic maintenance should be performed at least once a year by a qualified service technician to ensure that all the equipment is in safe, efficient operation. ***Failure to do so may eliminate warranty coverage***. In the first year of operation, it is highly recommended that inspections of all connection points and the combustion chamber be done at three month intervals, any signs of fouling or leaks must be thoroughly investigated immediately as failure to do so may void warranty. Assuming no cause for excessive fouling is found, then the period of months from initial start up that it was found that cleaning was required, shall become the required future minimum cleaning interval, but at no time should it exceed 12 months. The owner MUST make necessary arrangements with a qualified heating contractor for proper maintenance of the appliance. Installer must also inform the owner that the lack of proper care and maintenance of the appliance may result in a hazardous condition and lack of warranty coverage. The installer should discuss the contents of the User's Information Manual with the owner.

B. ANNUAL INSPECTION *(See LIT91179 Maintenance Checklist for required tools and materials)*

An inspection should cover, at a minimum, the following areas:

- Inspect all fittings, controls and connections for leaks, damage, or fouling
- Fire side:
  Heat exchanger
  Burner and ignitor
  Burner door and rear wall insulation
- Drain system components:
  Hoses & clamps
  Trap assembly
  Condensate neutralizer
- Test all safeties and operating controls
- Water side temperature rise (ΔT) test

INSPECTION AND CLEANING (photos illustrating each step follow sets of instructions)

CAUTION: Before removing the door of the appliance, switch off the electrical power supply to it.

- Remove the front cover and check the sensors, transducers, all pipes, lines and connections, and the heat exchanger (top, bottom) for traces of water and water leakage.
- Inspect the top of the casing and/or the top of the appliance for water leakage or traces of water from the air supply pipe or the air vent (if applicable).

B. ANNUAL INSPECTION (continued)

Complete burner, door & fan assembly removed for inspection

- Dismantle the burner unit: remove the (6) 6mm nuts (with a 10mm socket), the ignition cable, the power and speed control plugs, and the ground wire from the fan, and remove the burner/fan unit from the heat exchanger and cabinet.
- After the burner door is removed, it should be thoroughly inspected before being put back into service. There are two gaskets on the burner door; the first is the inner rope gasket, which is permanently affixed to the burner door. If this gasket is completely compressed (having no sealing ability), the door must be replaced. The second gasket is on the perimeter and is made of rubber; this gasket is easily replaced, and comes as a standard part of a maintenance kit (and should always be replaced during the annual maintenance procedure.

NOTE: Over-tightening the M6 nuts may cause the threaded rods on the front of the heat exchanger to break! If excess resistance is encountered when installing a M6 nut, discard that nut and use one of the spares shipped with the unit. The maximum torque for assembling a burner door nut is 5.9 ft-lb or 70.8 in-lb. Use a torque wrench suitable for this torque range to tighten the nuts.

- Remove and inspect the rear fiberboard. If any resistance is encountered with the removal of the screw securing the fiberboard in place, do not exert undo force; break the fiberboard out to provide access to the screw. Apply penetrating oil to the screw, let it sit, then remove. See photos below for details. Replace only after cleaning procedure. Use a new fiberboard if moisture has fouled it or if there is any physical damage preventing it from protecting the rear wall, such as cracks or warping. Warped fiberboards will allow the back wall to overheat, this could lead to a breach of the back wall. This will also cause a loss of efficiency and a rise in stack temperature.

NOTE: Failure to replace front and rear fiberboard when damaged may result in irreparable damage to the appliance!

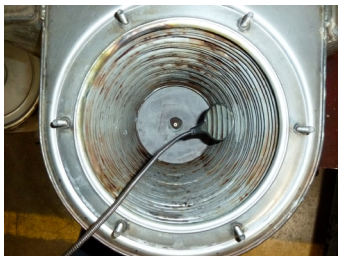

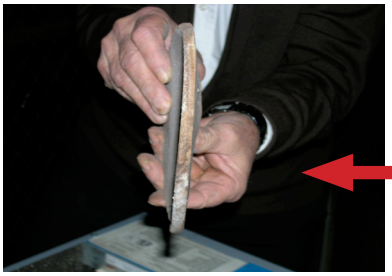

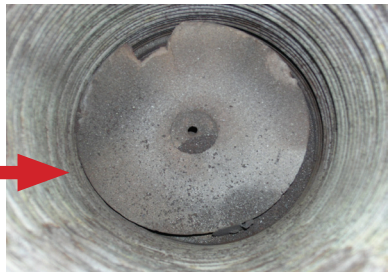

BOTH OF THESE MUST BE REPLACED!

- Check the fire side of the heat exchanger: only clean loose residue from the heat exchanger coil, use a vacuum cleaner and nylon brush, and do not push the residue between the openings of the coils if at all possible as this may impede the flow of the products of combustion.
- Use inspection mirror to check all heat passage spaces between coils, and using a short, thin putty knife or strip of stainless steel, remove all debris. ***These passages MUST be free and clear for proper heat transfer to occur.*** Rinse well all loose debris that was pushed down to the bottom of the condensate collection tray.
- It is recommended to only use clear water to rinse any remaining residue away—the water will automatically flow to the condensate drain point.
- ***If surface or coil gap fouling still exists after the above measures have been taken, the heat exchanger requires additional cleaning.*** Use a non-acid based cleaning solution, such as Fernox F3, to thoroughly soak the remaining residue. Brush clean and then completely rinse all residue and cleaning solution down the condensate drain assembly. Repeat if necessary.

(See complete cleaning instructions in Part 8, Section D)

- Check the distance from the electrode to the burner; there should be a 3/8" gap in between the two. If the existing electrode pins must be adjusted for proper gap, caution must be exercised, as they will likely be brittle from exposure to the flame; try to bend them as close to the burner door insulation as possible using two pair of pliers; one to support the rod, and one to bend with. New electrodes will be less susceptible to breakage during adjustment. The metal surface of the electrodes should also be carefully cleaned with emery cloth.

NOTE: Do not make any adjustments or cleaning with the electrode still mounted to the burner door, as damage to refractory may result!

- Dismantle the air gas mixing plate or chamber on the suction side of the fan and check for fouling. If required, clean the fan blade wheel and the air gas mixing box.
- Reassemble the burner chamber, making sure there is no moisture on any of the fireside components.

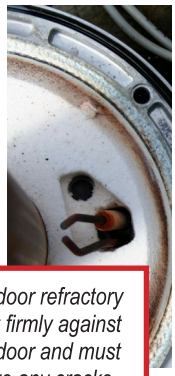

Burner door refractory must sit firmly against burner door and must not have any cracks, water damage, or gouges. If any of these exist, it MUST be replaced.

Cleaned heat exchanger—
prior to rear wall installation

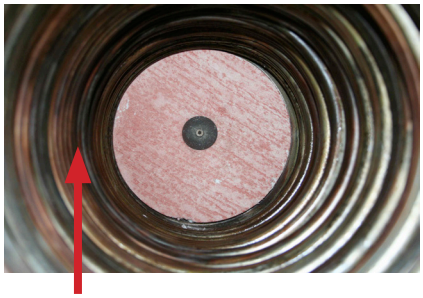

Cleaned heat exchanger—
after rear wall installation

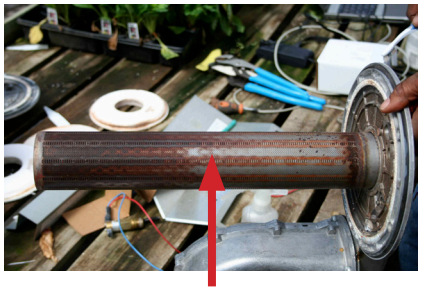

Burner & door assembly—
prior to fiberboard installation

B. ANNUAL INSPECTION (continued)

TESTING

The following steps require the power supply be turned back on; extreme caution must be exercised when performing service with the power supply on and the door off.

- When turning the appliance back on, listen for significant noises from the fan and pump. Also, inspect for leaks at the pump connections.
- Enter the status menu from the home screen to access the sensor readings, and record each reading, making sure that all sensors and thermometers are reading the same, with the heat off.
- Fire the appliance on maximum output for 5 minutes, in order to check the ΔT from the inlet sensor to the outlet sensor.

  - If the ΔT reading is out of design range by more than 10% or there is an A1 or A2 error on the display, refer to coil cleaning instructions below. Record ΔT to track any increases from one year to the next.

Flow and Pressure Drop Heat Exchanger only - (GPM and Feet of Head @ 68°F)

				Hydronic Applications					DHW Applications				
Model	BTU/hr. Input	Minimum Flow Rate *must be clean water system**	ΔP at Minimum Flow Rate - ft. of head	Hydronic* Pipe Size	Design ΔT Hydronic* @ 95% efficiency °F	°C	GPM	Head	DHW Pipe Size	Design ΔT DHW @ 97% efficiency °F	°C	GPM	Head
HWH 299.2	300,000	8.5	5.1	1.5"	51.8	28.8	11	9.3					
HWD 299.2	300,000								1.5"	35.3	19.6	16.5	21.1
HWH 399.2	399,999	11.31	3.9	1.5"	43.2	24.0	17.6	9.4					
HWD 399.2	399,999								2"	29.4	16.3	26.4	19.2
HWH 599.2	630,000	17.8	5.1	1.5"	45.3	25.2	26.4	9.4					
HWD 599.2	630,000								2"	30.9	17.1	39.6	21.5

** Must be closed loop system with clean, treated water.*

- Fire the appliance on maximum output, and measure and adjust the CO_2 percentage as required.
- Fire the appliance on minimum output, and measure and adjust the CO_2 percentage as required.
- If there are an unusual number of G01 faults or if combustion is off significantly, gas supply pressure must be verified at static (no load) and full building load conditions.
- See Table 3-3, Part 3, Section D, for specific settings.
- Inspect intake and exhaust screens at the termination point for signs of contamination (i.e. leaves, twigs, etc).
- A differential pressure (ΔP) reading should be taken across the exhaust and inlet air connection points of each appliance to confirm that it is below the maximum shown below.

NOTE: The inlet air pressure should be negative.

Model	Air Pressure (ΔP)
HW299	< .7" wc
HW399	< 1" wc
HW599	< .86" wc

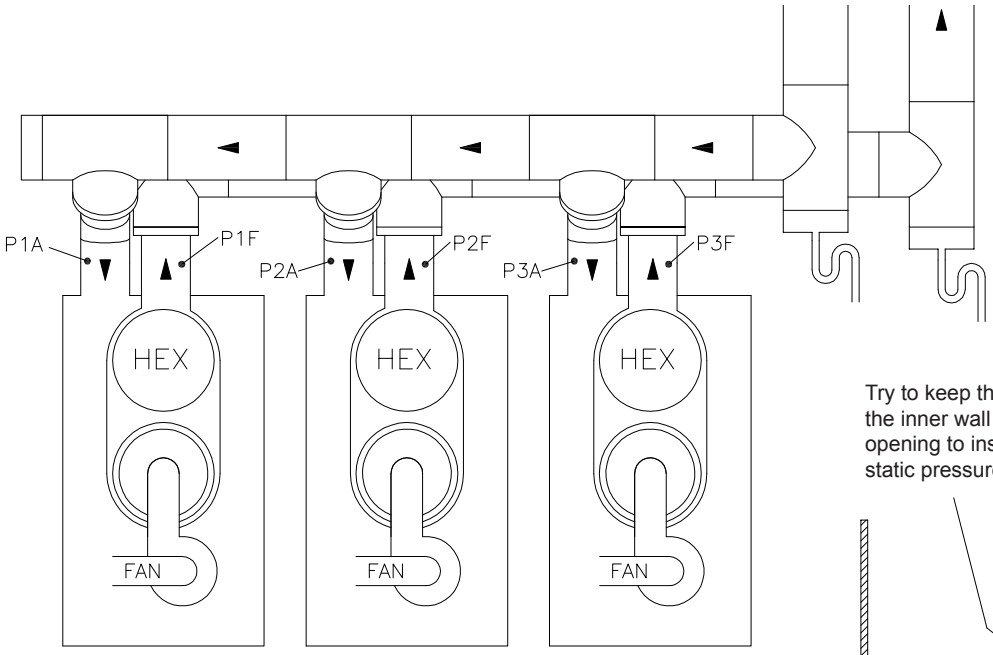

Try to keep the measuring hose flat with the inner wall of the pipe. Use a small opening to insure you are measuring static pressure and not velocity pressure

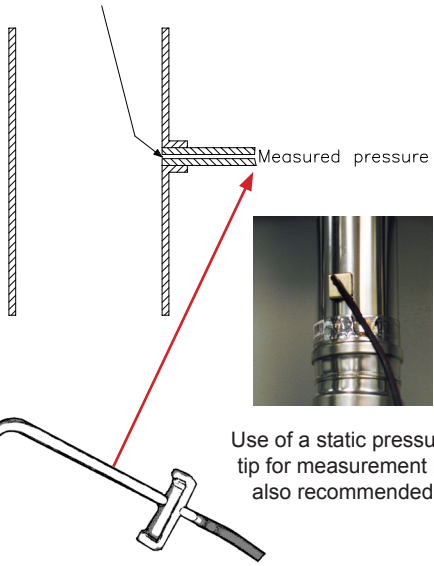

Use of a static pressure tip for measurement is also recommended

P (1, 2, 3) A
These will be negative pressures relative to atmosphere

P (1, 2, 3) F
These will be positive pressures relative to atmosphere

Example
P1A = -0.32” wc
P1F = 0.4” wc
Then the total pressure drop is:
ΔP total = -(P1A) + P1F = -0.32 + 0.4 = 0.72” wc

Calculations are done with:
- All boilers at high fire
- Water temperature 160/180ºF (gives the hottest flue gasses)
- All readings must be taken with boiler front cover installed

Doing the measurements under these conditions will give the most accurate results. There may be minor differences between appliances.

- A pH test must be performed at the exit point of the condensate neutralizer with litmus paper to test for acidity. pH level should be within 6.6–7.0. If the pH is less than 6.6, replace neutralizing medium.
- Checking the minimum and maximum settings on the display must be performed as a final check.
- All findings and concerns should be discussed with the appliance owner after the inspection is complete.

C. CONDENSATE TRAP CLEANING INSTRUCTIONS

NOTE: The condensate trap and entire drain system attached to it (above the neutralizer) should be cleaned at least once every year.

1) Turn off the power to the appliance.
2) Place a bucket under the condensate trap. Use caution when removing the clean-out cap, as the trap is full of condensate and it may be hot.
3) Remove the condensate clean-out cap, and be sure the bucket is under the open drain trap assembly to catch the debris and water.
4) Rinse out the clean-out cap in a sink to remove any dirt or buildup that may have accumulated.
5) Condensate drain assembly should now be checked for non-restricted flow throughout the entire assembly.
6) Reinstall the clean-out cap on the condensate trap.
7) Turn on the power to the appliance.
8) Make sure the hose from the condensate trap is not submerged too far into the neutralizer, there should be an air gap between the highest level of condensate and the outlet hose from the trap.
9) Monitor the condensate drain until flow has been established.

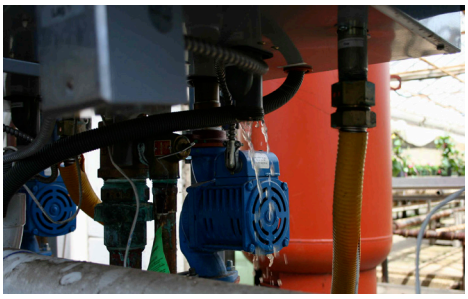

D. COMBUSTION CHAMBER COIL CLEANING INSTRUCTIONS*

Before beginning this procedure, you must have the following items on hand:

- Nylon brush—**DO NOT use brass, stainless or steel brushes.**
- Water
- Vacuum cleaner
- Fernox F3 Cleaner
- Fernox F1 Inhibitor Protector (boilers only)
- Fernox DS 40
- Towel for clean up and plastic sheeting to protect electronics.

NOTE: If electronics do get wet, DO NOT turn on power to appliance until they have been thoroughly dried, as component failure may result.

D. COMBUSTION CHAMBER COIL CLEANING INSTRUCTIONS* (continued)

FIRE SIDE CLEANING

1) Shut down the appliance by using the following steps:
   a. Turn off the power, close the gas valve, and shut down the unit. Wait for the unit to be cool to the touch.
   b. Remove the clean-out cap and place drain bucket according to the directions above.
   c. Remove the Molex plugs from the fan.
   d. Remove the (6) 6mm nuts from the burner plate assembly to access the coils.
   e. Pull the entire burner plate assembly towards you and remove rear target wall.

2) Vacuum first and then use the nylon brush to scrub coils to remove any buildup. Vacuum the debris from the coils.

3) Using a spray bottle filled with water or a hose under low pressure to avoid water spraying on electronics (be sure to cover them to protect against water damage), spray the coils liberally, making sure the water penetrates and funnels down through the condensate hose. If the condensate hose is blocked, try to knock any debris loose with a small screwdriver. Replace hose if not completely clean.

4) ***If surface or coil gap fouling still exists after the above measures have been taken, the heat exchanger requires additional cleaning.*** Use a **non-acid** based cleaning solution, such as Fernox F3, to thoroughly soak the remaining residue. Brush clean and then completely rinse all residue and cleaning solution down the condensate drain assembly. It may take several applications of the F3, followed by a rinsing, to completely clean the coil surfaces. Use a spray bottle for **each** (F3 and clear water). Repeat if necessary.

5) Be sure that water is flowing freely through the bottom casing of the heat exchanger and the drain is not plugged. At this point, the appliance should be ready to power back up.

6) Before powering up the appliance follow the steps below:
   a. Re-install the burner assembly and rear target wall (fiberboard insulation)
   b. Replace the (6) 6mm nuts to the burner plate, following appropriate tightening pattern and torque.
   c. Re-connect the Molex plugs.
   d. Re-set system thermostats.
   e. Replace the clean-out cap.
   f. Turn the appliance back on** and monitor the condensate drain until flow has been established.
   g. Re-connect the condensate hose to the condensate drain neutralizer connection.

WATER SIDE CLEANING (de-scaling kit is required for this process, please consult factory)

1) Shut down the appliance and clean by using the following steps for **heaters**:
   a. Turn off the power, close the gas valve, and shut down the unit. Wait for the unit to be cool to the touch.
   b. For water heaters, close both inlet and outlet water valves to isolate the appliance.
   c. Open the drain valve to let out all the water from the appliance, and circulate **Fernox DS 40 Cleaner*** in reverse of normal flow, to flush out any build up that may have occurred in the coils.
   d Flush with water to eliminate any of Fernox DS 40 Cleaner that may have been left behind.
   e. Close the drain valve and open the inlet and outlet water valves to put the appliance back online.

2) Shut down the appliance and clean by using the following steps for **boilers**:
   a. Turn off the power, close the gas valve, and shut down the unit. Wait for the unit to be cool to the touch
   b. At the chemical injection point first add the appropriate number of bottles of **Fernox DS 40 Cleaner*** to the system, based on total system water volume. Follow the cleaning instructions on the bottle.
   c. Open the drain valve to let out all the water from the appliance, and circulate Fernox DS 40 Cleaner in reverse of normal flow, to flush out any build up that may have occurred in the coils.
   d. Flush the system of all the Fernox DS 40.
   e. After the system has been flushed, add the Fernox F1 Inhibitor Protector (for closed-loop boiler applications only) to the system at the chemical injection point and leave in the system. One bottle of Fernox F1 treats approximately 26 gallons of water. Please follow instructions on the bottle for specific mixing ratios.

Detailed instructions on Water Side Cleaning can be found in LIT91195 Water Side Cleaning Procedure, available on our website.

*****NOTE: When firing up the boiler for the first few times you may experience some fluttering of the gas burner that may result in a flame lockout. This is normal and will require you to re-cycle the unit until this clears up. This is caused by water still present in the combustion chamber.***

After all cleaning has been done, it is recommended that a combustion analysis and testing, as shown in Section 8, Part B, be completed. See *LIT91111 (Start-Up Checklist) & LIT91133 (Cascade Start-Up Procedures)* for details.

****NOTE: Fernox DS 40 is a heat activated de-scaling solution. It must be heated to 160º–180ºF to clean efficiently. Follow Fernox instructions to ensure a fully clean heat exchanger.***

E. HEAT EXCHANGER ANTI-SCALING PREVENTION FEATURE

The appliance controller contains sophisticated software that enables it to monitor the rate of temperature rise through the heat exchanger. By doing this, it greatly reduces the possibility of heat exchanger failure due to scaling or fouling. A set of parameters are programmed in at the factory, to provide a design temperature rise (ΔT) setting on each size unit that is fixed. The Anti-Scale is based on an increase over the design ΔT through the heat exchanger. This Anti-Scale is determined using the inlet and outlet sensors, even if a tank thermistor is being used. If the Anti-Scale setting is reached, the unit will display H11, shut down and not re-fire until it has cooled. The first 3 times this happens, there will be a reduction of the maximum firing rate. The fault will be accompanied by either an A, B, or C suffix, indicating a maximum firing rate of 80%, 50%, or 30% respectively. The control will go into hard Lockout after the C suffix is achieved, and have to be manually reset. Once the heat exchanger has been acid cleaned, contact the factory for instructions on resetting the unit for full rated BTU input.

Typical causes for repeated H11 indications at start up are air trapped in the heat exchanger (be sure air vent cap is loose) or contaminates lodging in the piping or heat exchanger during installation, both of these causes can generally be cleared by isolating the hot water system and flushing water at full city pressure through the drain valve or relief valve on the appliance outlet.

PART 9. SPECIAL INSTALLATION REQUIREMENTS

A. INSTALLATION REQUIREMENTS—MASSACHUSETTS

Requirements for installation—Commonwealth of Massachusetts

For all side wall horizontally vented gas fueled equipment installed in every dwelling, building or structure used in whole or in part for residential purposes, including those owned or operated by the Commonwealth and where the side wall exhaust vent termination is less than seven (7) feet above finished grade in the area of the venting, including but not limited to decks and porches, the following requirements shall be satisfied:

1. INSTALLATION OF CARBON MONOXIDE DETECTORS. At the time of installation of the side wall horizontal vented gas fueled equipment, the installing plumber or gasfitter shall observe that a hard wired carbon monoxide detector with an alarm and battery back-up is installed on the floor level where the gas equipment is to be installed. In addition, the installing plumber or gasfitter shall observe that a battery operated or hard wired carbon monoxide detector with an alarm is installed on each additional level of the dwelling, building or structure served by the side wall horizontal vented gas fueled equipment. It shall be the responsibility of the property owner to secure the services of qualified licensed professionals for the installation of hard wired carbon monoxide detectors.

   a. In the event that the side wall horizontally vented gas fueled equipment is installed in a crawl space or an attic, the hard wired carbon monoxide detector with alarm and battery back-up may be installed on the next adjacent floor level.

   b. In the event that the requirements of this subdivision can not be met at the time of completion of installation, the owner shall have a period of thirty (30) days to comply with the above requirements; provided, however, that during said thirty (30) day period, a battery operated carbon monoxide detector with an alarm shall be installed.

2. APPROVED CARBON MONOXIDE DETECTORS. Each carbon monoxide detector as required in accordance with the above provisions shall comply with NFPA 720 and be ANSI/UL 2034 listed and IAS certified.

3. SIGNAGE. A metal or plastic identification plate shall be permanently mounted to the exterior of the building at a minimum height of eight (8) feet above grade directly in line with the exhaust vent terminal for the horizontally vented gas fueled heating appliance or equipment. The sign shall read, in print size no less than one-half (1/2) inch in size, "GAS VENT DIRECTLY BELOW. KEEP CLEAR OF ALL OBSTRUCTIONS".

4. INSPECTION. The state or local gas inspector of the side wall horizontally vented gas fueled equipment shall not approve the installation unless, upon inspection, the inspector observes carbon monoxide detectors and signage installed in accordance with the provisions of 248 CMR 5.08(2)(a)1 through 4.

   a. EXEMPTIONS: The following equipment is exempt from 248 CMR 5.08(2)(a)1 through 4:

      1. The equipment listed in Chapter 10 entitled "Equipment Not Required To Be Vented" in the most current edition of NFPA 54 as adopted by the Board; and

      2. Product Approved side wall horizontally vented gas fueled equipment installed in a room or structure separate from the dwelling, building or structure used in whole or in part for residential purposes.

B. INSTALLATION AT HIGH ALTITUDES

This appliance is equipped with an automatic combustion characteristic adjustment system, provided the installed elevation above sea level is entered into the operating control when the elevation is greater than 2,000 feet and less than or equal to 9,000 feet.

For elevations above 9,000 feet, set the maximum altitude allowable and set combustion as normal.

These appliance's have been operating at elevations up to 16,500 feet above sea level on LP gas; for more than 15 years utilizing these settings and a special burner and burner door that must be factory installed and tested during production.

To enter the operating elevation:

- From the setup menu, enter the password for the installer level or higher. Enter the parameters menu, then the altitude parameter set. Enter the appropriate elevation for the installation.
- The adjusted altitude entered is internally converted to an offset on top of the maximum fan speed.
- ***By adjusting the combustion characteristics as described above, there is no de-rate required at altitudes up to 9,000 feet. For elevations in excess of 9,000 feet or gas BTU content levels below 950 BTU/ cubic foot, consult the factory at 734.419.0200 or 800.968.5530 for adjustments and de-rating information.***

PART 10. PARTS BREAKDOWN

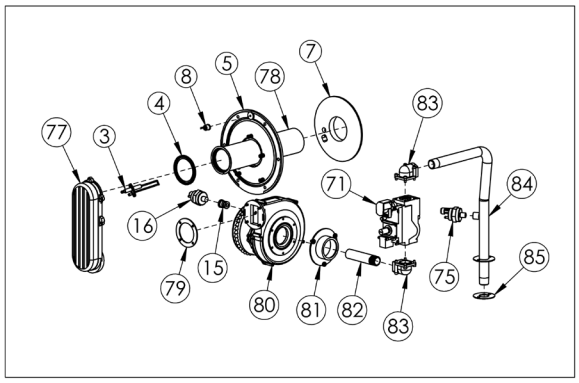

HW 299.2/399.2 ASSEMBLY

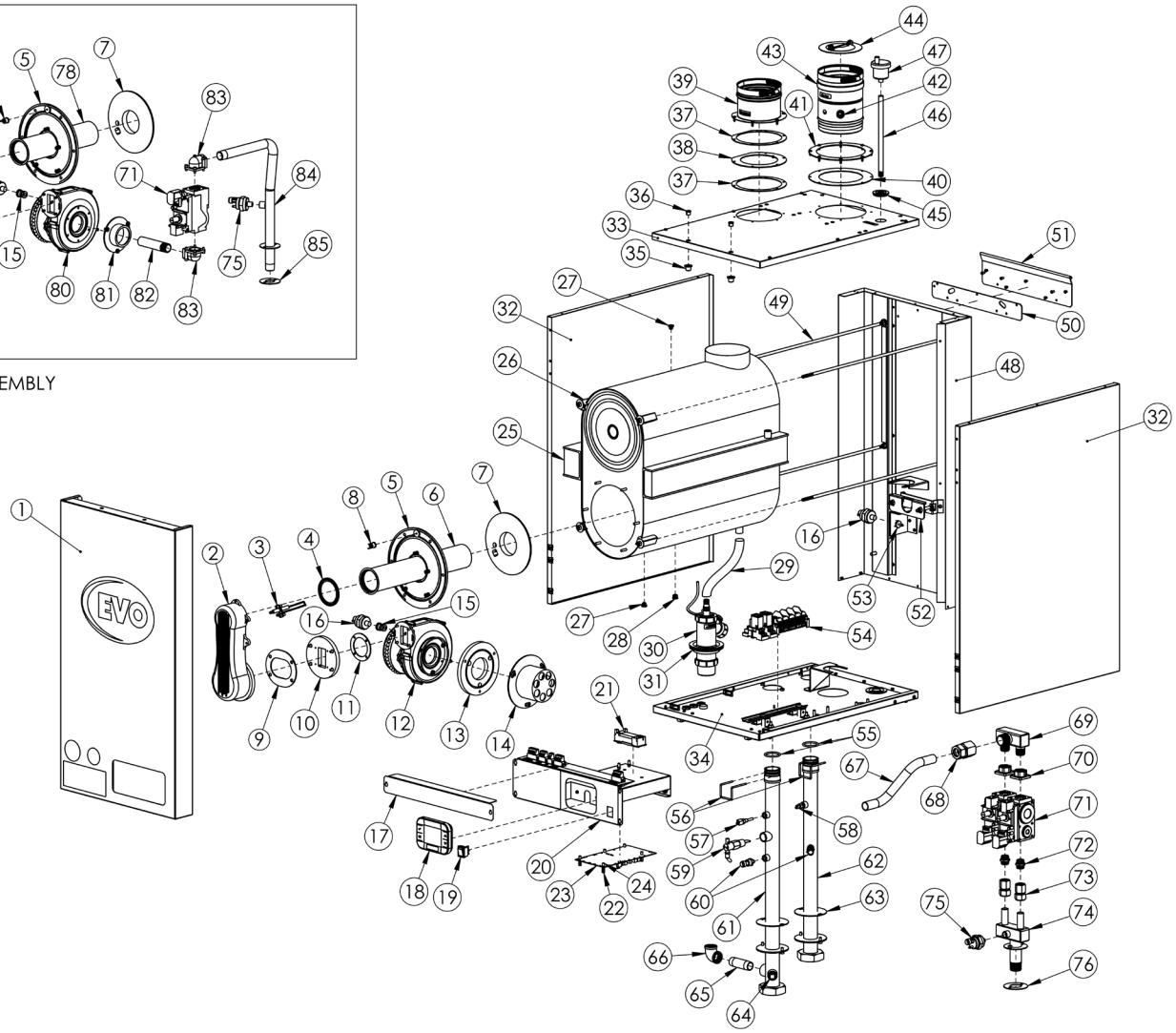

CASCADE BOX

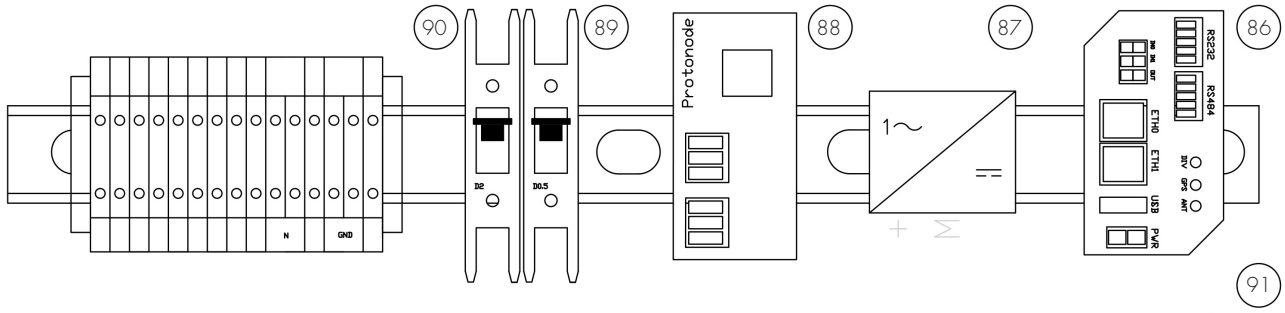

86 4G Router - D111152
87 Power Supply - D124768
88 Protonode - D115059
89 0.5 Amp Breaker - D108624
90 2 Amp Breaker - D106485
91 Cascade Control Board - D106480

Not Pictured
Cascade Display Board - D106481

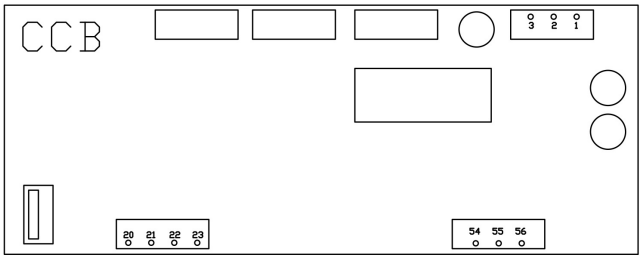

PARTS AND PRICING LIST FOR 299.2/.3–599.2/.3

LABEL	DESCRIPTION	PART#
1	PANEL FRONT DOOR EVO299-399HOT ASSY W/BEVEL WIN	D116957
	DOOR ASSY EVO599HOT FLAT WINDOW	D109348
2	BURNER INL HW599 AIR/GAS	D105610
3	PILOT SPARK ELECTRODE ASSEMBLY 79-599 KNURLED	PLT 94318 A
4	GASKET 3-5/16 OD EPDM 60 DURO TUBE/BURNER	D104184
5	BURNER DOOR HW79-599	D105611
6	BURNER PIPE HW599 70MM X 395MM	D105609
7	INSULATION BURNER DOOR W/ SPARES MONO/DUO HAM	D105632
8	SWITCH TEMP LIMIT BURNER DOOR	D106936
9	GASKET BLO HW599	D104185
10	FLANGE FAN ADPT AMETEK 7.6 TO EBM RG175	D105630
11	GASKET 3.27 OD EPDM 70A HW179 GAS/AIR INL PIP	D106935
12	BLOWER 7.6 240VAC HGH OUTPUT ENHANCED FAN HW599	D109384
12	BLOWER RG 175 230VAC HW599 EBM PAPST	D113735
13	FLANGE FAN ADPT INL 140-100MM DIA AMETEK 7.6	D105631
14	COVER VENTURI BURNER AIR/GAS MXG HW599	D105629
15	COUPLING RDCR 1/4X1/8 NPT 150 SS CF8	D106932
16	TRANSDUCER PRESS 1/4 MNPT 0-1/2 PSI .2 MODELS	D104963
	SWITCH DIF PRESS M20 CONN CNDS .3 MODELS (NOT SHOWN)	D113636
17	BRACKET PROTECTION HW299-599 CS TB G30 BOILER CTRL	D107939
18	DISPLAY BOILER BRD	D107557
19	SWITCH RKR ON/OFF 20A 250V DPST	D108302
20	PANEL DWR HW299-599	D107543
21	TRANSFORMER IGNIT	D104904
22	STANDOFF HEX #4-40 X 3/4 SS 18-8	D109484
23	BOARD CTRL BOILER 2 DRIVERS	D108471
24	SPACER RD #4 X 1/4 NYL	D104899
25	EXCHANGER HEAT HW599 ASME W/ FAST CONN	D105679
26	BRACKET HOLD DOWN HEAT EXCHANGER SS T304 HW299-599	D106928
27	PLUG HEX 1/8 BSPP SS CF8 HW79-199SIT M5 HI-LMT	D121450
28	PLUG HEX 1/4 BSPP SS CF8 HW299-599 M5 HI-LMT	D121451
29	DRAIN HOSE LOWER ASSY HW299-399	CDK 94201
	HOSE 1 OD POLY CROSS LINKED	D107853
30	EVO HW299-599 CNDS TRAP DRN	D104204
31	GROMMET 2-1/2 NEOPRENE 3-1/2 HOLE	D104277
32	PANEL SIDE HW299-399 LEFT	D117663
	PANEL SIDE HW299-399 RIGHT	D117661
	PANEL SIDE 599 LEFT	D109597
	PANEL SIDE 599 RIGHT	D109598
33	PANEL TOP HW299-399 CS A1008 TB	D110567
	TOP PANEL ASSY HW299-399	D118981
	HW599 EVO TOP PANEL	D107647
	HW599 PANEL TOP ASSY	D110440

LABEL	DESCRIPTION	PART#
	PANEL SHEET METAL BOTTOM ASSEMBLY 299-399	JKB 94102 B
	PANEL BTM 18GA CS A1008 TB HW599HOT PWDR COAT	D108482
	PANEL BTM ASSY HW599HOT	D109370
34	PANEL BTM 20GA CS 1010-1020 HW299-399 POWDER COAT	D113884
35	CAP PROTECTION 0.48 ID PVC BLACK	D108572
36	GROMMET SNAP IN 1/2 OD X 3/8 ID NYLON WHITE L	D108574
37	GASKET 5.9 OD W/ CUT 299/599 AIR INLET	D104186
38	DISK RDCR 3.2 ID X 4-1/2 DUCT FLG SS A268 AIR INL HW299-399	D113156
	COLLAR DUCT 4 SS A268 HW599	D109372
39	DUCT FLG 4-1/2 SS A268 AIR INL HW299-399	D113155
	COLLAR DUCT 5 SS A268 W/ HOSE CLAMP HW599	D109371
40	GASKET 8.067 OD SILICON FLUE GAS HW299-399	D113103
	GASKET 7-1/2 OD SILICON FLUE GAS HW599	D104188
41	FLANGE 8.07 OD CS GALV FLUE GAS HW299-399 SPCL COAT PROC	D114072
	FLANGE FLUE 5.887 ID CS TB G90 HW599	D109123
42	THERMISTOR 1/4 MBSPP X 55 MM 10 KOHM NEGATIVE	D104921
43	FLUE GAS OUTLET ASSEMBLY HW299-399	VNT 94101 A
	FLUE GAS OUTLET ASSEMBLY HW599	VNT 94102 A
44	EVO299-399 DUO VLV NON-RTN	D113615
	EVO 599 DUO VLV NON-RTN	D104923
45	GROMMET 1.875 OD SILICONE AIR VENT TUBE BLACK	D104189
46	ROD TBE 0.54 X 9.73 SS MT304 HW299-599 AIR VENT	D108337
47	VENT AIR 1/8 NPT AUTOMATIC BRS	D104903
48	PANEL REAR EVO299-399HOT	D114534
	HW599 EVO REAR PANEL HC	D108296
49	ROD TBE 8MM X 12.812 SS T303 M8-1.25 X 1.625 HW299	D114161
	ROD TBE 8MM X 17 SS T303 M8-1.25 X 1.625 HW399	D110848
	ROD TBE M8X1.25 24.25 SS T303 HW599 HEAT EX HOLD DOWN	D108299
50	BRACKET HGR CS A1011 CS TB HW79-599 SPCR	D103748
51	BRACKET HGR CS A1011 CS TB HW79-599	D103747
52	BRACKET CS TB G30 GAS VAL FRONT HW599	D107926
53	ADAPTER NYLON 1/4 FNPT X 3/16 BARB	D104964
54	EVO PWR RELAY HOT CONTROLS	D108684
55	O-RING 26MM X 3.5MM RBR HW299	D114528
	O-RING 1.63 OD RBR HW399	D113610
	O-RING 40MM X 4MM EPDM 60 DUROMETER HW599	D104578
56	CLIP FORK SS T304 HW299 ARM	D113886
	CLIP FORK SS T304 HW399 ARM	D113885
	CLIP FORK SS HW599 ARM	D108335
57	THERMISTOR 1/8 NPT X 25 MM 10 KOHM NEGATIVE TEMP COEFFICIENT DUPLEX	D104920
58	THERMISTOR 1/8 NPT X 25 MM 10 KOHM NEGATIVE T	D104919
59	SWITCH FLOW 1/2 MNPT 1.09 V-10 FLAT PADDLE EVO299, 399, 599	D114073
60	TRANSDUCER PRESS 1/8 MNPT 0-150 PSI (HW599.2 QTY=2X)	D104961

Continued on next page

PARTS AND PRICING LIST FOR 299.2/.3–599.2/.3 (continued)

LABEL	DESCRIPTION	PART#
61	ARM OUT EVO599	D104575
62	ARM INLET HW599 HC	D104574
63	GASKET 3/4 OD EPDM 70A DURO SQ HOLES FAST CONNECT ARM 399/599	D104191
64	PLUG PIPE 1/2 NPT BRS SQ HD SCH40 LF	D30035
65	NIPPLE TBE 3/4 NPT X 3 BRS SCH40	D10861
66	ELBOW 90 3/4 NPT CU UNS C87850 LF	D11029
67	TUBE EVO GAS HW599 OUTLET REV. D	D111660
68	ADAPTER 1 CMPXFNPT BRS HW599	D104272
69	MANIFOLD GAS OUT HW599	D105000
70	KIT FLG 3/4	D104922
71	VALVE GAS 1/2 BSPT HW79/599	D108737
72	NIPPLE HEX 1/2 MNPTXNPSL X 1 BRS	D104271
73	ADAPTER RDCR 3/4 CMP X 1/2 FNPT BRS HW599 GAS	D104275
74	MANIFOLD GAS INL HW599	D105002
75	TRANSDUCER PRESS 1/4 MNPT +/-1 PSI	D104962
76	GASKET 2.8 OD EPDM 60 DURO EVO 599 GAS MAN	D104190
77	BURNER INL HW79-399 AIR/GAS	D112959
78	BURNER PIPE HW299 70MM X 210MM	D113711
	BURNER PIPE HW399 70MM X 296MM	D113050
79	GASKET 3.27 OD EPDM 70A HW179 GAS/AIR INL PIP	D106935
80	BLOWER 7.6 240VAC STD OUTPUT ENHANCED FAN NAU HW299-399	D105628
81	COVER VENTURI BURNER AIR/GAS MXG HW299	D113733
	COVER VENTURI BURNER AIR/GAS MXG HW399	D113051
82	NIPPLE TOE 3/4 BPST X 4.467 SCH40 CS A53 TF HW299-399 GAS OUT CTD ZINC AND CLEAR 299/399 GAS OUTLET TUBE	D114865
83	KIT FLG 3/4 NPT ELBOW	D114078
84	PIPE GAS INL HW399HOT	D116288
85	GASKET 2.4 OD EPDM 60 DURO INL GAS MAN	D113692
86	ROUTER CELLULAR 4G	D111152
87	POWER SPLY 12VDC 30W 2.5A DIN MNT AC/DC CONVR	D124768
88	PROTONODE N54	D115059
89	BREAKER .5A 1 POLE DIN MNT	D108624
90	BREAKER 2A 480V 1 POLE DIN MNT	D106485
91	BOARD CASCADE CTRL HOT	D106480
NS	GASKET BURNERDOOR EVO HW79–599	GKT 74035
NS	HOSE 0.22 CNDS AIR INTAKE/PS DRN HAMILTON	D104205
NS	FIBERBOARD BACK WALL, 16MM NEW VERSION	FIB 74117
NS	WASHER FOR COMBUSTION CHAMBER INSULATION	MSC 74029
NS	SCREW COMBUSTION CHAMBER 16MM INSULATION	MSC 74028
NS	FLUE GAS ANALYZER PORT PLUG EPDM HW79/599	GKT 74093
NS	LEAD IGNIT 6.4MM CONN W/ 780MM CABLE	D120954
NS	KIT MAINTENANCE HEAT EXCHANGER 16MM	MNT 94309B
NS	NUT HEX FLG M6 HAMILTON	D105680
NS	VALVE SAF RELF 3/4 MNPT INLXFNPT OUT 125 PSI BRZ	D110095
NS	VALVE SAF RELF 3/4 MNPT INLXFNPT OUT 50 PSI BRZ	D112960
NS	RELAY 120 VAC 15 A DPDT	D104965
NS	RELAY PROTECTION MDL 110/240V	D108168

PART 11. WARRANTY INFORMATION

A. WARRANTY CONTACT INFORMATION

Hamilton Engineering Company, Inc. warrants each appliance to be free from defects in material and workmanship according to terms, conditions and time periods. *Unless otherwise noted, these warranties commence on the date of installation.* ***If required periodic maintenance is not performed, warranty coverage may be voided.***

Warranty information can be found on our website ***www.hamiltonengineering.com***.

If you have any questions or comments, please contact us at **800.968.5530**. If you need emergency technical support after hours, we are available 24 hours a day, 7 days a week by calling this number.

Please keep the following information on hand when calling about warranty information:

Model:_____Serial #:_____

Installer Name:_____Phone #:_____Install Date:_____